NORTH SALT LAKE ENGINEERING

10 East Center St.
North Salt Lake, UT 84054
(801) 335-8700
(801) 335-8739 (Fax)

LEN ARAVE
Mayor

PAUL OTTOSON
City Engineer

Addendum No. 1

"Eaglepointe Landslide Mitigation"

Project No. 14-041

March 5, 2015

This Addendum includes changes to Bid Schedules A, B, and D, as well as additions to the Geotechnical Report that was part of the original Contract Documents.

Please sign below and include a copy of this letter in your bid, acknowledging that you have received Addendum No. 1 for this project. Call with any questions that you may have.

Authorized Signature

_____

Issued by: Paul Ottoson, P.E.
NSL City Engineer
801-335-8723

March 5, 2015

ADDENDUM NO. 1

TO: CONTRACT DOCUMENTS
FOR: EAGLE POINTE LANDSLIDE REMEDIATION PROJECT, LOCATED SOUTH OF PARKWAY DRIVE AT APPROX. 740 EAST -– PROJECT # NSL.037 (NSL Project # 14-041)
FOR: CITY OF NORTH SALT LAKE, UTAH

A. **SECTION 00410 - BID SCHEDULE.**

1. SCHEDULE "A":

   a. Add an Item No. 4-A for alternate work for this work item as follows:

Item No.	Description	Amounts & Units	Unit Price	Bid Total
4-A.	General earthwork for site work, based on attached "Alternate Upper Slide Area Site Plan and Upper Cross Sections", pages 1 thru 5	Lump Sum	$_____	$_____

   (1) Note: The use of this bid item will alter the approximate earthwork quantities shown in the description for Bid Item No. 4.

   b. Add an additional Total Line as follows: TOTAL -- SCHEDULE "A", Using Bid Item No. 4-A.

   c. Add the attached drawings to the Contract Documents: Upper Slide Area Site Plan, Wall 1:1(2) Profile, Wall 1:1(3) Profile, Parking Lot (1) Profile, and Parking Lot (2) Profile; pages 1 thru 5.

2. SCHEDULE "B": Add Bid Item No. 27 as follows:

Item No.	Description	Amounts & Units	Unit Price	Bid Total
27.	Construct Two-Tier Rockery Walls for the Evans Residence, Complete, as indicated in attached Rockery Design Package	Lump Sum	$_____	$_____

   (1) Note: See referenced plan for location of the Evans residence.

3. SCHEDULE "D":

   a. Add the attached ALTERNATE SCHEDULE "D" Bid Schedule to the Contract Documents.

   b. Add the attached drawings to the Contract Documents: EAGLE POINTE ESTATES UTILITY/ROAD IMPROVEMENTS; G1, PP01, PP02, P03, D1 Thru D6 (10 pages); which indicate the work items for ALTERNATE SCHEDULE "D".

B. **GEOTECHNICAL REPORT:** A PDF document including Geotechnical Report maps and tables has been added. The majority of this information was provided with the original Contract Documents. The following have been added to the Contract Documents: laboratory summary table and residual shear data (Plate C-1, C-20, and C-21).

GILSON ENGINEERING

EVANS RESIDENCE
ROCKERY DESIGN PACKAGE
321 PARKWAY CIRCLE
NORTH SALT LAKE, UTAH

SHEET NO.	DESCRIPTION
A-1	COVER SHEET
A-2	PLAN VIEW
A-3	SECTION VIEW
A-4	SPECIFICATIONS AND GUIDELINES
A-5	DESIGN CRITERIA
SECTION B	ROCKERY CALCULATIONS
SECTION C	GLOBAL STABILITY
SECTION D	LAB TEST RESULTS

PREPARED FOR:	PAUL EVANS 321 PARKWAY CIRCLE NORTH SALT LAKE, UT 84054
REVIEWED BY:	KENT A. HARTLEY, P.E.
PREPARED BY:	PROFESSIONAL ENGINEER 7726633-2202 JARED K. WILLIAMS 2-20-15 ELECTRONIC SEAL STATE OF UTAH JARED K. WILLIAMS, P.E.

N

NOT TO SCALE

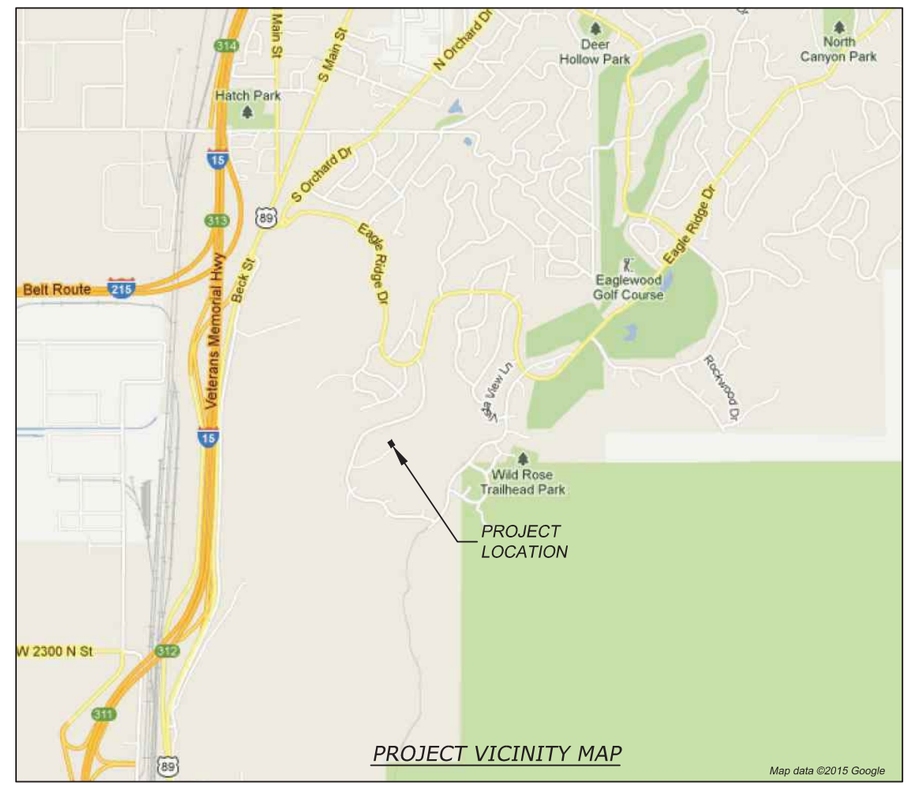

PROJECT VICINITY MAP

MARK		DATE	BY	CHK

REVISIONS

IGES®
12429 SOUTH 300 EAST, STE. 100
DRAPER, UTAH 84020
(801) 748-4044 FAX: (801) 748-4045

EVANS RESIDENCE
ROCKERY DESIGN PACKAGE
321 PARKWAY CIRCLE
NORTH SALT LAKE, UTAH
COVER SHEET

DESIGNED BY:	JKW FEB 20, 2015	PLOT SCALE	
DRAWN BY:	JKW FEB 20, 2015	1=1	
CHECKED BY:	KAH FEB 20, 2015	DWG SCALE	
APPROVED BY:	KAH FEB 20, 2015	NTS	
IGES PROJECT NO. 02061-001	SHEET NO. A-1		REV. N/A

\\bhf-server\companyOffice\Projects\02061-Paul Evans\Dwg\02061-001.dwg, 2/20/2015 11:14:13 AM, 1:1

PLAN VIEW

TOPOGRAPHIC SURVEY FROM GILSON ENGINEERING, INC. SHEET C.301 DATED NOVEMBER 2014
AERIAL IMAGE FROM AGRC WEBSITE, 2012 HIGH RESOLUTION ORTHOPHOTOGRAPHY (HRO),
12TVL220120.tif, DATE OF IMAGE - APRIL, 2012

MARK		DATE	BY	CHK

REVISIONS

IGES®
12429 SOUTH 300 EAST, STE. 100
DRAPER, UTAH 84020
(801) 748-4044 FAX: (801) 748-4045

EVANS RESIDENCE
ROCKERY DESIGN PACKAGE
321 PARKWAY CIRCLE
NORTH SALT LAKE, UTAH
PLAN VIEW

DESIGNED BY: JKW FEB 20, 2015		PLOT SCALE 1=1
DRAWN BY: JKW FEB 20, 2015		
CHECKED BY: KAH FEB 20, 2015		DWG SCALE 1"=20'
APPROVED BY: KAH FEB 20, 2015		
IGES PROJECT NO. 02061-001	SHEET NO. A-2	REV. N/A

\\bbf-server\company\Office\Projects\02061-Paul Evans\Dwg\02061-001.dwg, 2/20/2015 11:14:16 AM, 1:1

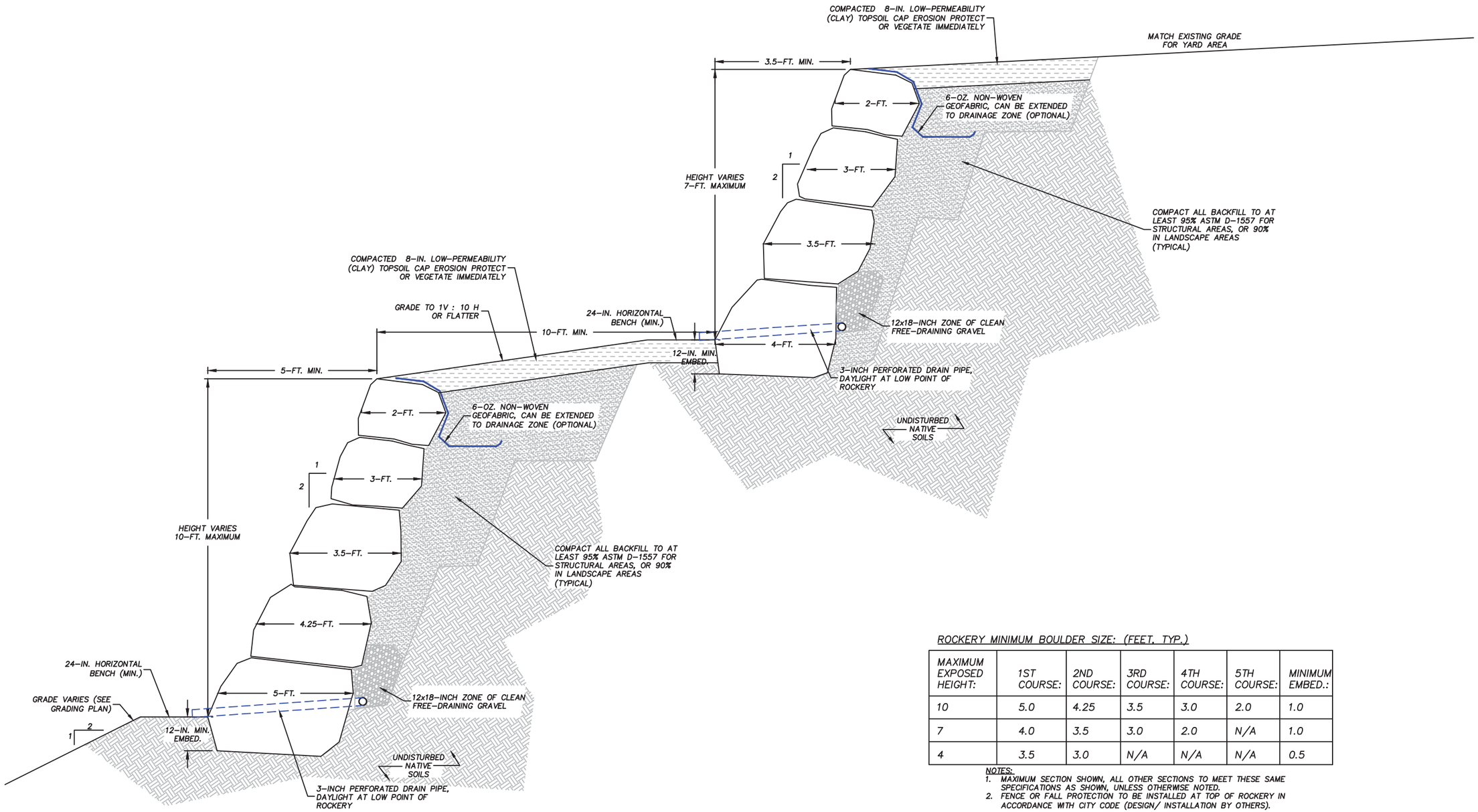

SECTION A : A'
TWO TIER MAXIMUM SECTION

ROCKERY MINIMUM BOULDER SIZE: (FEET, TYP.)

MAXIMUM EXPOSED HEIGHT:	1ST COURSE:	2ND COURSE:	3RD COURSE:	4TH COURSE:	5TH COURSE:	MINIMUM EMBED.:
10	5.0	4.25	3.5	3.0	2.0	1.0
7	4.0	3.5	3.0	2.0	N/A	1.0
4	3.5	3.0	N/A	N/A	N/A	0.5

NOTES:
1. MAXIMUM SECTION SHOWN, ALL OTHER SECTIONS TO MEET THESE SAME SPECIFICATIONS AS SHOWN, UNLESS OTHERWISE NOTED.
2. FENCE OR FALL PROTECTION TO BE INSTALLED AT TOP OF ROCKERY IN ACCORDANCE WITH CITY CODE (DESIGN/ INSTALLATION BY OTHERS).

MARK		DATE	BY	CHK

REVISIONS

IGES®
12429 SOUTH 300 EAST, STE. 100
DRAPER, UTAH 84020
(801) 748-4044 FAX: (801) 748-4045

EVANS RESIDENCE
ROCKERY DESIGN PACKAGE
321 PARKWAY CIRCLE
NORTH SALT LAKE, UTAH
SECTION VIEW

DESIGNED BY:	JKW FEB 20, 2015	PLOT SCALE	1=1
DRAWN BY:	JKW FEB 20, 2015		
CHECKED BY:	KAH FEB 20, 2015	DWG SCALE	1"=3'
APPROVED BY:	KAH FEB 20, 2015		
IGES PROJECT NO.	02061-001	SHEET NO.	A-3
REV.	N/A		

\\bl-server\company\Office\Projects\02061-Paul Evans\Dwg\02061-001.dwg, 2/20/2015 11:15:06 AM, 1:1

ROCKERY CONSTRUCTION SPECIFICATIONS:

GENERAL

- DESIGN AND CONSTRUCTION INFORMATION IS BASED ON SITE GEOMETRY, THE REFERENCED CONSTRUCTION PLAN, AND THE ENGINEERING ANALYSIS PERFORMED AS PART OF THE SCOPE OF WORK FOR THIS PROJECT.
- CONTRACTOR SHALL LOCATE AND FULLY RESOLVE ALL CONFLICTS WITH EXISTING AND/OR PROPOSED UTILITIES PRIOR TO RETAINING WALL CONSTRUCTION.
- THE FOLLOWING MEASURES SHALL BE IMPLEMENTED TO REDUCE THE POTENTIAL FOR SATURATION OF THE SOIL BEHIND THE RETAINING WALLS.
- HARDSCAPE, VEGETATION, OR EROSION CONTROL MEASURES SHALL BE ESTABLISHED ABOVE AND BELOW THE RETAINING WALLS IMMEDIATELY FOLLOWING CONSTRUCTION.
- CONDITIONS SUCH AS LEAKY OR BROKEN IRRIGATION LINES AND/OR UNCONTROLLED RUNOFF FROM PRECIPITATION CAN LEAD TO SATURATION OF THE SOIL BEHIND THE WALL. A SATURATED CONDITION CAN LEAD TO SLOPE OR WALL DISTRESS AND MUST BE PREVENTED.

MATERIALS

- RETAINED SOILS SHALL CONSIST OF SUITABLE GRANULAR NATIVE AND APPROVED GRANULAR BORROW BACKFILL SOILS AS SHOWN ON THE SECTION VIEWS.
- MATERIAL USED TO FILL IN THE SPACE BETWEEN THE ROCKS AND THE SOIL CUT SHALL CONSIST OF GRANULAR SOILS MEETING THE FOLLOWING CRITERIA:
  - GRANULAR MATERIALS CONTAINING LESS THEN 35% FINES
  - MAXIMUM NOMINAL PARTICLE SIZE OF 4 INCHES
  - REASONABLY FREE FROM ORGANIC OR OTHER DELETERIOUS MATERIALS
- ROCKS TO BE USED AS FACING SHALL BE DURABLE ANGULAR BOULDERS WITH A MINIMUM NOMINAL DIAMETER OF 24 INCHES. ROCK SIZES SHALL MEET ALL MINIMUM DIAMETERS IN ACCORDANCE WITH DESIGN DRAWINGS. ROCKS SHOULD FOLLOW FHWA GUIDELINES:
  - ROCKS SHALL BE HARD, ANGULAR, DURABLE, AND ABLE TO RESIST PHYSICAL, CLIMATIC, AND CHEMICAL DECOMPOSITION.
  - ROCKS SHALL BE ROUGHLY RECTANGULAR, TABULAR, OR CUBIC IN SHAPE; ROUNDED ROCKS AND COBBLES SHOULD NOT BE USED.
  - ROCKS SHOULD CONSIST OF INTACT BLOCKS WITHOUT OPEN FRACTURES, FOLIATION, OR OTHER PLANES OF WEAKNESS
- GEOTEXTILE FABRIC SHALL BE NON-WOVEN AND 6.0-OZ. MIN.
- 3-INCH PERFORATED/SOLID ADS OR PVC DRAIN PIPE

INSTALLATION

- ROCKS SHOULD BE STACKED IN GENERAL ACCORDANCE WITH THE ASSOCIATED ROCKERY CONTRACTORS (ARC) AND FHWA ROCKERY CONSTRUCTION GUIDELINES. ARC GUIDELINES GIVEN ON THIS SHEET (SEE GUIDELINES TO THE RIGHT). FHWA GUIDELINES ARE SUMMARIZED AS FOLLOWS:
  - EACH ROCK SHOULD BEAR ON AT LEAST TWO OTHER ROCKS
  - EACH ROCK SHOULD HAVE AT LEAST THREE BEARING POINTS – TWO IN FRONT AND ONE IN BACK
  - THE FRONT-MOST BEARING POINTS FOR EACH ROCK SHOULD BE WITHIN 6 INCHES OF THE AVERAGE FACE OF THE ROCKERY
  - THE REAR OF THE ROCKS SHOULD BE ALIGNED ALONG AN IMAGINARY VERTICAL PLANE. IF ROCKS LARGER THAN THE MINIMUM SPECIFIED DIAMETERS ARE USED, THEY CAN EXTEND BEYOND THIS IMAGINARY PLANE PROVIDED THEY DO NOT INTERFERE WITH ROCKERY DRAINAGE
  - THE TOPS OF EACH ROCK SHOULD BE SLOPED BACK AT LEAST 5% TOWARDS THE BACK OF THE ROCKERY
  - ONLY SMALL, WALK-BEHIND TYPE COMPACTION EQUIPMENT SHALL BE USED WITHIN 3 FEET OF THE BACK OF THE RETAINING WALL BLOCK.
- ROCK FACING SHOULD BE STACKED AT A MAXIMUM STEEPNESS OF 1 HORIZONTAL TO 2 VERTICAL.
- THE BOTTOM ROW OF ROCKS SHOULD BE BURIED (EMBEDDED) A MINIMUM DEPTH OF 12 INCHES FOR ALL ROCKERIES.
- ALL BACKFILL SOILS SHALL CONSIST OF GRANULAR SOILS MEETING THE GRADATION AS PREVIOUSLY SPECIFIED.
- ROCK WALL SHOULD BE INSPECTED AT REGULAR INTERVALS BY GEOTECHNICAL ENGINEER TO ACCOMMODATE FINAL CONSTRUCTION OBSERVATION AND ACCEPTANCE LETTER.
- THE CONTRACTOR IS RESPONSIBLE FOR ARRANGING THE CONSTRUCTION OBSERVATIONS AND QUALITY CONTROL.
- BENCH NATIVE CUT A MINIMUM OF 0.25H:1V IN BEDROCK SOILS AND 0.5H:1V IN NATIVE SOILS. SOME AREAS MAY REQUIRE FLATTER CUTS OR BENCHING IF INSTABILITY CONCERNS ARE NOTED.

ROCK STACKING CONSTRUCTION GUIDELINES:

ROCKS SHOULD BE STACKED IN GENERAL ACCORDANCE WITH THE ASSOCIATED ROCKERY CONTRACTORS (ARC) ROCKERY CONSTRUCTION GUIDELINES, SUMMARIZED AS FOLLOWS:

- ROCKS SHOULD BE PLACED SO THAT THERE ARE NO CONTINUOUS JOINT PLANES IN EITHER THE VERTICAL OR LATERAL DIRECTION (SEE DETAIL A)
- WHEREVER POSSIBLE, EACH ROCK SHOULD BEAR ON AT LEAST TWO ROCKS BELOW IT.
- THE UPPER PLANE OF EACH ROCK BETWEEN COURSES (THE TOP SURFACE OF ROCK), SHOULD SLOPE BACK TOWARDS THE SLOPE FACE AND AWAY FROM THE FACE OF THE ROCK WALL (SEE DETAIL B)

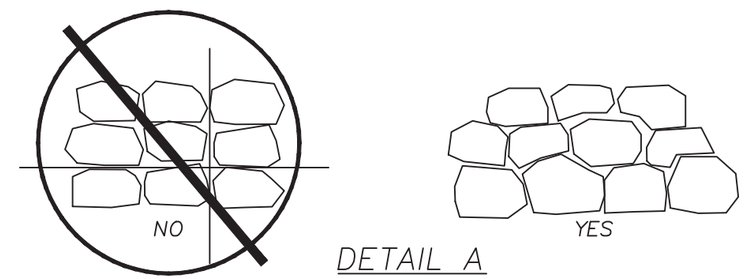

DETAIL A

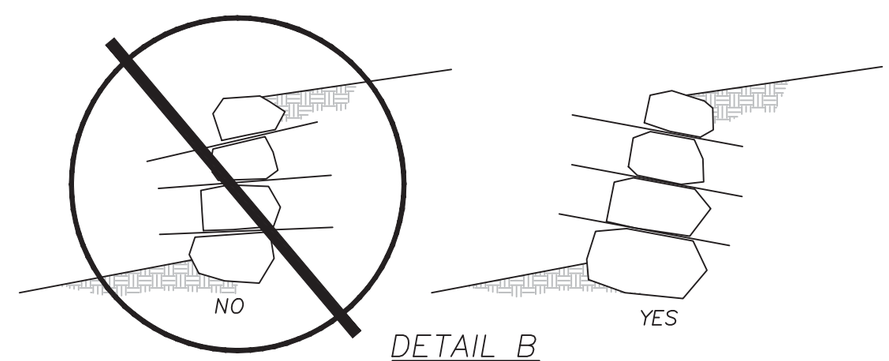

DETAIL B

MARK		DATE	BY	CHK

REVISIONS

IGES®
12429 SOUTH 300 EAST, STE. 100
DRAPER, UTAH 84020
(801) 748-4044 FAX: (801) 748-4045

EVANS RESIDENCE
ROCKERY DESIGN PACKAGE
321 PARKWAY CIRCLE
NORTH SALT LAKE, UTAH
SPECIFICATIONS AND GUIDELINES

DESIGNED BY:	JKW FEB 20, 2015	PLOT SCALE	
DRAWN BY:	JKW FEB 20, 2015	1=1	
CHECKED BY:	KAH FEB 20, 2015	DWG SCALE	
APPROVED BY:	KAH FEB 20, 2015	NTS	
IGES PROJECT NO. 02061-001	SHEET NO. A-4		REV. N/A

\\blf-server\company\Office\Projects\02061-Paul Evans\Dwg\02061-001.dwg, 2/20/2015 11:15:11 AM, 1:1

MAXIMUM ROCKERY GEOMETRY AND LOADING CONDITIONS					
TIER	LENGTH (FT.)	MAX. EXP. HEIGHT (FT.)	MAX. BATTER	BACKSLOPE CONDITIONS	SURCHARGE LOADING
LOWER	130	10.0	1H:2V	10H:1V (MAX.)	875 PSF @ 10'
UPPER	105	7.0	1H:2V	10H:1V (MAX.)	NONE

RETAINING WALL STABILITY ANALYSES		
WALL TYPE	ANALYSIS	DESIGN SOFTWARE
ROCKERY	GLOBAL STABILITY	SLIDE, VERSION 6.026, ROCSCIENCE, INC, 1998-2014, BUILD DATE JANUARY 15, 2010
	INTERNAL STABILITY	ROCKERY DESIGN AND CONSTRUCTION GUIDELINES, FHWA-CFL/TD-06-006

SOIL CONDITIONS*			
SOIL AREA	FRICTION ANGLE	COHESION	UNIT WEIGHT
RETAINED SAND	33°	0 PSF**	125 PCF
FOUNDATION SOIL	33°	200 PSF	125 PCF

*OBTAINED FROM DIRECT SHEAR DATA ON NATIVE SOILS (SEE SECTION D).

**50PSF COHESION MODELED IN GLOBAL STABILITY CALCULATIONS, TO PROHIBIT RAVELING SURFACE FAILURES IN THE GLOBAL STABILITY ANALYSIS. NO COHESION USED IN INTERNAL/EXTERNAL STABILITY CALCULATIONS.

SEISMIC PARAMETERS USED IN DESIGN		
SEISMIC CRITERIA	S_{DS}	PGA
2009 AASHTO	1.188g	0.495g

1. USGS SEISMIC DESIGN MAPS SUMMARY REPORT: http://geohazards.usgs.gov/designmaps ACCESSED FEB 18, 2015

2. INTERNATIONAL CODE COUNCIL, 2012, INTERNATIONAL BUILDING CODE
3. A MAXIMUM ALLOWABLE SEISMIC DISPLACEMENT THRESHOLD OF 5 INCHES WAS USED TO REDUCE THE HORIZONTAL SEISMIC ACCELERATION COEFFICIENT, k_h TO 0.21g IN ACCORDANCE WITH KAVAZANJIAN AND OTHERS (1997)
   3.1. KAVAZANJIAN, E., MATASOVIC, N., HADJ-HAMOU, T., AND SABATINI, P.J., 1997, GEOTECHNICAL ENGINEERING CIRCULAR #3 - DESIGN GUIDANCE: GEOTECHNICAL EARTHQUAKE ENGINEERING FOR HIGHWAYS, VOLUME 1, DESIGN PRINCIPLES, FHWA-SA-97-076

THESE DOCUMENTS ARE INSTRUMENTS OF SERVICE AND SHALL REMAIN THE INTELLECTUAL PROPERTY OF IGES, INC. NO USE OR RE-USE OF THESE DOCUMENTS SHALL BE PERMITTED IN PART OR IN TOTAL UNLESS EXPRESSLY AUTHORIZED IN WRITING BY IGES, INC.

MARK		DATE	BY	CHK

REVISIONS

IGES®
12429 SOUTH 300 EAST, STE. 100
DRAPER, UTAH 84020
(801) 748-4044 FAX: (801) 748-4045

EVANS RESIDENCE
ROCKERY DESIGN PACKAGE
321 PARKWAY CIRCLE
NORTH SALT LAKE, UTAH
DESIGN CRITERIA

DESIGNED BY: JKW FEB 20, 2015		PLOT SCALE 1=1
DRAWN BY: JKW FEB 20, 2015		
CHECKED BY: KAH FEB 20, 2015		DWG SCALE NTS
APPROVED BY: KAH FEB 20, 2015		
IGES PROJECT NO. 02061-001	SHEET NO. A-5	REV. N/A

\\blf-server\company\Office\Projects\02061-Paul Evans\Dwg\02061-001.dwg, 2/20/2015 11:15:16 AM, 1:1

SECTION B

Rockery Design following FHWA guidelines (2006 CFL/TD-06-006)

IGES Inc. Engineer: JKW Job Number: 02061-001 Date: 2/20/2015

Section: 10-Ft Lower Tier

Parameters:

H_{total} =	11	ft	Total Height of Rockery
H_R =	10	ft	Exposed Height of Rockery
ϕ_s =	33	deg	Soil Friction Angle - Effective
c_s =	0	psf	Cohesion Intercept of soil
γ_s =	125	pcf	Unit weight of the soil
γ_R =	150	pcf	Unit weight of the rock
ϕ_f =	33	deg	Foundation soil friction ang.
c_f =	100	psf	Foundation cohesion (bearing only)
γ_f =	125	pcf	Foundation soil unit weight
D =	1.0	ft	Embedment Depth
δ =	33.0	deg	Interface Friction Angle
α =	63.4	deg	Soil Cut Angle
ψ =	26.6	deg	Back Cut Inclination
β =	5.7	deg	Backslope Angle
μ =	0.70		Frictional Component
μ_{rock} =	0.55		Rock-to-Rock Friction

Slope Geometry:

Backslope:

10 H 1 V

Soil Cut Angle:

1 H 2 V

Rock Size Parameters (avg dimension):

# Rocks =	5		
B_{base} =	5.00	ft	base width
B2 =	4.25	ft	
B3 =	3.50	ft	
B4 =	3.0	ft	
B5 =	2.0	ft	

Rockery Face Geometry:

Rockery Face Slope:

1 H 2 V

ν = 63.4 deg Angle

Lateral Earth Coefficient:

K_A = 0.111

Surcharge:

Uniform: Uniform Applied Surcharge

q_s =	0	psf	
F_s =	0.0	lbf/ft	(Horizontal Surcharge Load)
y_s =	5.5	ft	(Surcharge load centroid)

Strip: Strip Load to Account Upper Tier

q_s =	875	psf	(7' tall upper tier 10' behind top boulder)
x_s =	7	ft	(Distance from soil cut)
W_s =	13	ft	(Width of Strip Load is 2* Height of Wall minus setback)
F_s =	3070	lbf/ft	(Horizontal Surcharge Load)
y_s =	6	ft	(Surcharge load centroid)

Boussinesq Equation for Strip Load (Upper Tier)*:

β	α	z (ft)	σ'_h (psf)
0.0	90.0	0.00	0.01
2.9	87.0	0.55	56.56
5.8	84.0	1.10	111.10
8.5	81.0	1.65	161.85
11.2	78.1	2.20	207.39
13.6	75.4	2.75	246.81
15.9	72.7	3.30	279.68
17.9	70.1	3.85	305.99
19.7	67.7	4.40	326.05
21.4	65.4	4.95	340.40
22.8	63.2	5.50	349.68
24.0	61.2	6.05	354.60
25.1	59.2	6.60	355.83
25.9	57.4	7.15	354.03
26.7	55.6	7.70	349.77
27.3	53.9	8.25	343.56
27.7	52.4	8.80	335.83
28.1	50.9	9.35	326.95
28.4	49.5	9.90	317.24
28.6	48.1	10.45	306.95
28.7	46.8	11.00	296.29

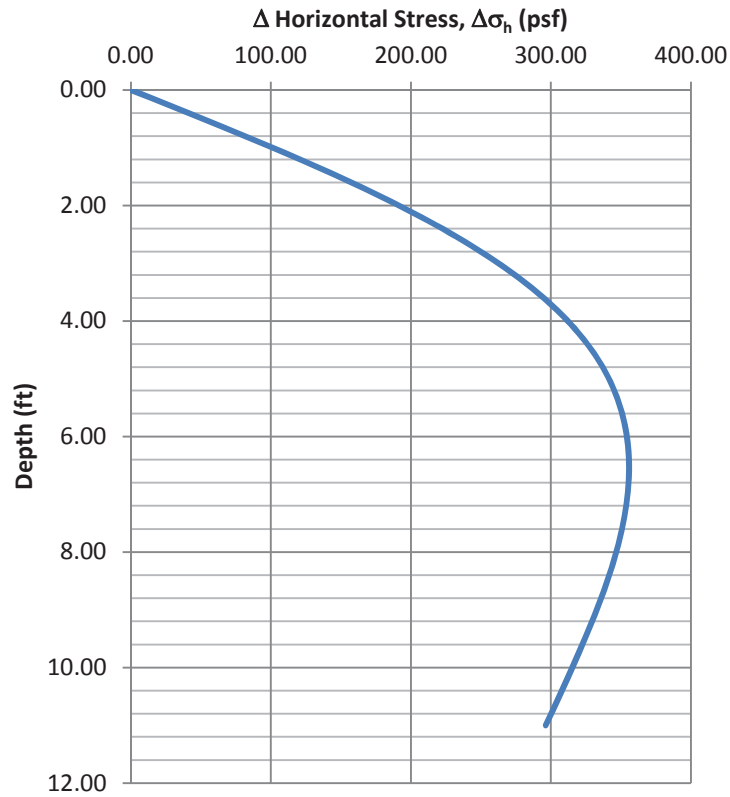

* From USS Steel Sheet Piling Design Manual, 1984, U.S. Department of Transportation /FHWA

Total Horizontal Force:

F_H = 3903.4 lbf/ft

Total Vertical Force:

F_V = 93.99 lbf/ft

Wall Weight *:

W_1 =	8,164	lbf/ft
W_2 =	4,429	lbf/ft
W_3 =	2,994	lbf/ft
W_4 =	1,847	lbf/ft
W_5 =	418	lbf/ft
W_6 =	0	lbf/ft
W_7 =	0	lbf/ft
W_8 =	0	lbf/ft
ΣW_i =	17,851	lbf/ft

Wall Weight Centroids:

x_1 =	2.50	ft
x_2 =	4.62	ft
x_3 =	5.60	ft
x_4 =	6.49	ft
x_5 =	6.86	ft
x_6 =	6.21	ft
x_7 =	6.21	ft
x_8 =	6.21	ft
y_{bar} =	4.64	ft
x'	0.50	ft

* Rock weights based on data presented in Table 1 [pg. 9] (Mack et al., 2006)

Frictional Resistance:

F_μ = 12561.5 lbf/ft

K_P = 3.39 Use Passive? **N** (Enter "N" for no and "Y" for Yes)

F_P = 0.0 lbf/ft (Only Used in External Sliding/OT)

Factor of Safety against External Sliding:

FS_{SL} = 3.3 **OK** ←

Factor of Safety against External Overturning:

M_o = 21475.7 lbf-ft/ft M_r = 73119.8 lbf-ft/ft

$\Sigma W_i{*}x_i$ = 72478 lbf-ft/ft **FS_{OT} =** 3.5 **OK** ←

Factor of Safety against Individual Rock Overturning/Sliding: (Mack et al., 2006)

Boulder	H' (ft)	B' (ft)	ΣW_i	$\Sigma W_i{*}x_i$	M_o	M_r	**FS_{OT}**	**FS_{SL}**	
2.0	8.9	4.3	9,687	47,224	3,538	47,579	13.45	5.50	**OK**
3.0	6.0	3.5	5,258	28,983	986	29,106	29.51	7.05	**OK**
4.0	3.5	3.0	2,265	13,715	175	13,749	78.37	9.75	**OK**
5.0	1.4	2.0	418	2,658	6	2,662	422.50	17.08	**OK**
6.0	0.0	0.0	0	0	0	0			
7.0	0.0	0.0	0	0	0	0			
8.0	0.0	0.0	0	0	0	0			

Factor of Safety against Bearing Capacity:

e_{max} = 0.833

e_s = -0.378 **OK** ←

q_{max} = 5216.6 psf

Meyerhof Bearing Capacity Equation:

q = 125 psf B' = 4.24 ft

L = 100 ft L '= 99.24 ft

Shape Factors:

s_c = 1.029

s_q = 1.015

s_γ = 1.015

Depth Factors:

d_c = 1.087

d_q = 1.043

d_γ = 1.043

Bearing Capacity Factors:

N_q = 26.092

N_c = 38.638

N_γ = 26.166

Reduction Factor for Wide Footings:

κ (ft) = 6

r_γ = 1.00

q_{ult} = 15,120 psf

FS_{BC} = 2.9 **OK** ←

Seismic Earth Pressure Coefficient:

Design Ground acceleration (7% in 75 years) [Mack et al., 2006]

AASHTO Standard Design Specifications for Bridges

A =	0.498			
k_h =	0.21	Use 1/2 of A?	**N**	(Mack et al., 2006)
k_v =	0	(If "N" then use displacement-factored k_h [see below])		
θ =	11.70			
K_{AE} =	0.251			

	AASHTO 11.6.5	Kavazajian et al*	
allowable displacement (d):		5	in.
displacement-factored k_h:		**0.21**	g

* Kavazanjian, E., Matasovic, N., Hadj-Hamou, T. and Sabatini, P.J., Geotechnical Engineering Circular #3 – Design Guidance: Geotechnical Earthquake Engineering for Highways, Volume 1 – Design Principles, FHWA-SA-97-076, 1997

Seismic Surcharge Pressure:

F_A =	838.7	lbf/ft
F_{AE} =	1895.8	lbf/ft
ΔF_{AE} =	1057.1	lbf/ft

Factor of Safety against Seismic Overturning:

$M_{o,s}$ =	45539.5	lbf-ft/ft	
$M_{r,s}$ =	74103.2	lbf-ft/ft	
$FS_{OT,s}$ =	**1.7**	**OK**	←

Factor of Safety against Seismic Sliding:

$F_{H,S}$ =	8649.5		
$F_{R,S}$ =	12644.4		
$FS_{SL,s}$ =	**1.5**	**OK**	←

Factor of Safety against Seismic Bearing Capacity:

e_s =	0.919		
$q_{max,s}$ =	7595	psf	
FS_{BC} =	**2.0**	**OK**	←

Failure Mechanism	FS Requir	FS Obtained	OK
External Sliding	**1.5**	**3.3**	**OK**
External Overturning	**2.0**	**3.5**	**OK**
Individual Rock Overturning	**2.0**	**13.4**	**OK**
Individual Rock Sliding	**1.5**	**5.5**	**OK**
Bearing Capacity	**2.0**	**2.9**	**OK**
Seismic Overturning	**1.5**	**1.7**	**OK**
Seismic Sliding	**1.1**	**1.5**	**OK**
Seismic Bearing Capacity	**1.5**	**2.0**	**OK**

DESIGN METHODOLOGY AS PER:
MACK, D.A., SANDERS, S.H., MILLHONE, W.L., FIPPIN, R.L., AND KENNEDY, D.G., 2006, ROCKERY DESIGN AND CONSTRUCTION GUIDELINES, SANDERS & ASSOCIATES GEOSTRUCTURAL ENGINEERING, INC., REPORT NO. FHWA-CFL/TD-06-006, REPORT DATED NOVEMBER 2006.

Rockery Design following FHWA guidelines (2006 CFL/TD-06-006)

IGES Inc. Engineer: JKW Job Number: 02061-001 Date: 2/20/2015

Section: 7-Ft Lower Tier

Parameters:

H_{total} =	8	ft	Total Height of Rockery
H_R =	7	ft	Exposed Height of Rockery
ϕ_s =	33	deg	Soil Friction Angle - Effective
c_s =	0	psf	Cohesion Intercept of soil
γ_s =	125	pcf	Unit weight of the soil
γ_R =	150	pcf	Unit weight of the rock
ϕ_f =	33	deg	Foundation soil friction ang.
c_f =	100	psf	Foundation cohesion (bearing only)
γ_f =	125	pcf	Foundation soil unit weight
D =	1.0	ft	Embedment Depth
δ =	33.0	deg	Interface Friction Angle
α =	63.4	deg	Soil Cut Angle
ψ =	26.6	deg	Back Cut Inclination
β =	5.7	deg	Backslope Angle
μ =	0.70		Frictional Component
μ_{rock} =	0.55		Rock-to-Rock Friction

Slope Geometry:

Backslope:

10 H 1 V

Soil Cut Angle:

1 H 2 V

Rock Size Parameters (avg dimension):

# Rocks =	4		
B_{base} =	4.0	ft	base width
B2 =	3.5	ft	
B3 =	3.0	ft	
B4 =	2.0	ft	

Rockery Face Geometry:

Rockery Face Slope:

1 H 2 V

ν = 63.4 deg Angle

Lateral Earth Coefficient:

K_A = 0.111

Surcharge:

Uniform: Uniform Applied Surcharge

q_s =	0	psf	
F_s =	0.0	lbf/ft	(Horizontal Surcharge Load)
y_s =	4	ft	(Surcharge load centroid)

Strip: Strip Load to Account for Upper Tier

q_s =	875	psf	(7' tall upper tier 10' behind top boulder)
x_s =	7	ft	(Distance from soil cut)
W_s =	7	ft	(Width of Strip Load is 2* Height of Wall minus setback)
F_s =	1500.0	lbf/ft	(Horizontal Surcharge Load)
y_s =	5.5	ft	(Surcharge load centroid)

Boussinesq Equation for Strip Load (Upper Tier)*:

β	α	z (ft)	σ'_h (psf)
0.0	90.0	0.00	0.00
1.6	87.5	0.40	31.71
3.2	85.1	0.80	62.71
4.8	82.7	1.20	92.32
6.4	80.3	1.60	119.95
7.8	78.0	2.00	145.14
9.2	75.7	2.40	167.55
10.5	73.4	2.80	186.96
11.7	71.3	3.20	203.30
12.8	69.2	3.60	216.60
13.8	67.2	4.00	226.98
14.7	65.2	4.40	234.61
15.5	63.3	4.80	239.75
16.2	61.5	5.20	242.63
16.9	59.8	5.60	243.55
17.4	58.1	6.00	242.75
17.9	56.5	6.40	240.50
18.3	55.0	6.80	237.05
18.6	53.5	7.20	232.60
18.9	52.1	7.60	227.36
19.1	50.7	8.00	221.49

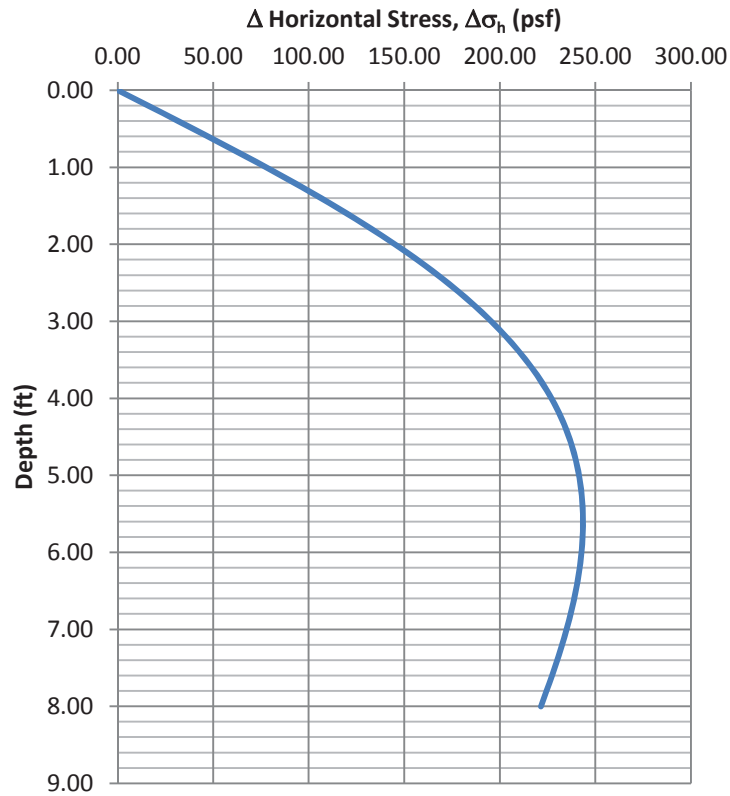

* From USS Steel Sheet Piling Design Manual, 1984, U.S. Department of Transportation /FHWA

Total Horizontal Force:

F_H = 1940.8 lbf/ft

Total Vertical Force:

F_V = 49.72 lbf/ft

Wall Weight *:

W_1 =	4,429	lbf/ft
W_2 =	2,994	lbf/ft
W_3 =	1,847	lbf/ft
W_4 =	418	lbf/ft
W_5 =	0	lbf/ft
W_6 =	0	lbf/ft
W_7 =	0	lbf/ft
W_8 =	0	lbf/ft
ΣW_i =	9,687	lbf/ft

Wall Weight Centroids:

x_1 =	2.00	ft
x_2 =	3.76	ft
x_3 =	4.65	ft
x_4 =	5.03	ft
x_5 =	4.38	ft
x_6 =	4.38	ft
x_7 =	4.38	ft
x_8 =	4.38	ft
y_{bar} =	3.43	ft
x'	0.50	ft

* Rock weights based on data presented in Table 1 [pg. 9] (Mack et al., 2006)

Frictional Resistance:

F_μ = 6815.6 lbf/ft

K_P = 3.39 Use Passive? **N** (Enter "N" for no and "Y" for Yes)

F_P = 0.0 lbf/ft (Only Used in External Sliding/OT)

Factor of Safety against External Sliding:

FS_{SL} = 3.6 **OK** ←

Factor of Safety against External Overturning:

M_o = 9425.5 lbf-ft/ft M_r = 31072.8 lbf-ft/ft

$\Sigma W_i{*}x_i$ = 30808 lbf-ft/ft **FS_{OT} =** 3.3 **OK** ←

Factor of Safety against Individual Rock Overturning/Sliding: (Mack et al., 2006)

Boulder	H' (ft)	B' (ft)	ΣW_i	$\Sigma W_i{*}x_i$	M_o	M_r	**FS_{OT}**	**FS_{SL}**	
2.0	6.0	3.5	5,258	19,321	1,754	19,444	11.09	4.34	**OK**
3.0	3.5	3.0	2,265	9,554	394	9,588	24.32	4.94	**OK**
4.0	1.4	2.0	418	1,891	37	1,894	51.05	4.01	**OK**
5.0	0.0	0.0	0	0	0	0			
6.0	0.0	0.0	0	0	0	0			
7.0	0.0	0.0	0	0	0	0			
8.0	0.0	0.0	0	0	0	0			

Factor of Safety against Bearing Capacity:

e_{max} = 0.667

e_s = -0.223 **OK** ←

q_{max} = 3249.4 psf

Meyerhof Bearing Capacity Equation:

q = 125 psf B' = 3.55 ft

L = 100 ft L '= 99.55 ft

Shape Factors:

s_c = 1.024

s_q = 1.012

s_γ = 1.012

Depth Factors:

d_c = 1.104

d_q = 1.052

d_γ = 1.052

Bearing Capacity Factors:

N_q = 26.092

N_c = 38.638

N_γ = 26.166

Reduction Factor for Wide Footings:

κ (ft) = 6

r_γ = 1.00

q_{ult} = 14,026 psf

FS_{BC} = 4.4 **OK** ←

Seismic Earth Pressure Coefficient:

Design Ground acceleration (7% in 75 years) [Mack et al., 2006]

AASHTO Standard Design Specifications for Bridges

A =	0.498			
k_h =	0.21	Use 1/2 of A?	N	(Mack et al., 2006)
k_v =	0			(If "N" then use displacement-factored k_h [see below])
θ =	11.70			
K_{AE} =	0.251			

	AASHTO 11.6.5	Kavazajian et al*	
allowable displacement (d):		5	in.
displacement-factored k_h:		0.21	g

* Kavazanjian, E., Matasovic, N., Hadj-Hamou, T. and Sabatini, P.J., Geotechnical Engineering Circular #3 – Design Guidance: Geotechnical Earthquake Engineering for Highways, Volume 1 – Design Principles, FHWA-SA-97-076, 1997

Seismic Surcharge Pressure:

F_A =	443.6	lbf/ft
F_{AE} =	1002.7	lbf/ft
ΔF_{AE} =	559.1	lbf/ft

Factor of Safety against Seismic Overturning:

$M_{o,s}$ =	18975.5	lbf-ft/ft	
$M_{r,s}$ =	31473.8	lbf-ft/ft	
$FS_{OT,s}$ =	1.7	**OK**	←

Factor of Safety against Seismic Sliding:

$F_{H,S}$ =	4501.9		
$F_{R,S}$ =	6859.5		
$FS_{SL,s}$ =	1.6	**OK**	←

Factor of Safety against Seismic Bearing Capacity:

e_s =	0.725		
$q_{max,s}$ =	5112	psf	
FS_{BC} =	2.8	**OK**	←

Failure Mechanism	FS Requir	FS Obtained	OK
External Sliding	**1.5**	**3.6**	**OK**
External Overturning	**2.0**	**3.3**	**OK**
Individual Rock Overturning	**2.0**	**11.1**	**OK**
Individual Rock Sliding	**1.5**	**4.0**	**OK**
Bearing Capacity	**2.0**	**4.4**	**OK**
Seismic Overturning	**1.5**	**1.7**	**OK**
Seismic Sliding	**1.1**	**1.6**	**OK**
Seismic Bearing Capacity	**1.5**	**2.8**	**OK**

DESIGN METHODOLOGY AS PER:
MACK, D.A., SANDERS, S.H., MILLHONE, W.L., FIPPIN, R.L., AND KENNEDY, D.G., 2006, ROCKERY DESIGN AND CONSTRUCTION GUIDELINES, SANDERS & ASSOCIATES GEOSTRUCTURAL ENGINEERING, INC., REPORT NO. FHWA-CFL/TD-06-006, REPORT DATED NOVEMBER 2006.

Rockery Design following FHWA guidelines (2006 CFL/TD-06-006)

IGES Inc. Engineer: JKW Job Number: 02061-001 Date: 2/20/2015

Section: 4-Ft Lower Tier

Parameters:

H_{total} =	4.5	ft	Total Height of Rockery
H_R =	4	ft	Exposed Height of Rockery
ϕ_s =	33	deg	Soil Friction Angle - Effective
c_s =	0	psf	Cohesion Intercept of soil
γ_s =	125	pcf	Unit weight of the soil
γ_R =	150	pcf	Unit weight of the rock
ϕ_f =	33	deg	Foundation soil friction ang.
c_f =	100	psf	Foundation cohesion (bearing only)
γ_f =	125	pcf	Foundation soil unit weight
D =	0.5	ft	Embedment Depth
δ =	22.0	deg	Interface Friction Angle
α =	63.4	deg	Soil Cut Angle
ψ =	26.6	deg	Back Cut Inclination
β =	5.7	deg	Backslope Angle
μ =	0.70		Frictional Component
μ_{rock} =	0.55		Rock-to-Rock Friction

Slope Geometry:

Backslope:

10 H 1 V

Soil Cut Angle:

1 H 2 V

Rock Size Parameters (avg dimension):

# Rocks =	2		
B_{base} =	3.5	ft	base width
B2 =	3.0	ft	

Rockery Face Geometry:

Rockery Face Slope:

1 H 2 V

ν = 63.4 deg Angle

Lateral Earth Coefficient:

K_A = 0.116

Surcharge:

Uniform: Uniform Applied Surcharge

q_s =	0	psf	
F_s =	0.0	lbf/ft	(Horizontal Surcharge Load)
y_s =	2.25	ft	(Surcharge load centroid)

Strip: Strip Load to Account for Upper Tier

q_s =	500	psf	(4' tall upper tier 10' behind top boulder)
x_s =	5	ft	(Distance from soil cut)
W_s =	3	ft	(Width of Strip Load is 2* Height of Wall minus setback)
F_s =	350.0	lbf/ft	(Horizontal Surcharge Load)
y_s =	3	ft	(Surcharge load centroid)

Boussinesq Equation for Strip Load (Upper Tier)*:

β	α	z (ft)	σ'_h (psf)
0.0	90.0	0.00	0.00
1.0	87.9	0.23	10.72
1.9	85.8	0.45	21.26
2.9	83.7	0.68	31.46
3.8	81.7	0.90	41.17
4.7	79.7	1.13	50.25
5.5	77.7	1.35	58.61
6.3	75.7	1.58	66.15
7.1	73.8	1.80	72.82
7.8	71.9	2.03	78.60
8.5	70.0	2.25	83.49
9.1	68.2	2.48	87.48
9.7	66.5	2.70	90.63
10.2	64.8	2.93	92.99
10.7	63.1	3.15	94.60
11.1	61.6	3.38	95.53
11.5	60.0	3.60	95.85
11.9	58.5	3.83	95.64
12.2	57.1	4.05	94.95
12.4	55.7	4.28	93.86
12.6	54.3	4.50	92.43

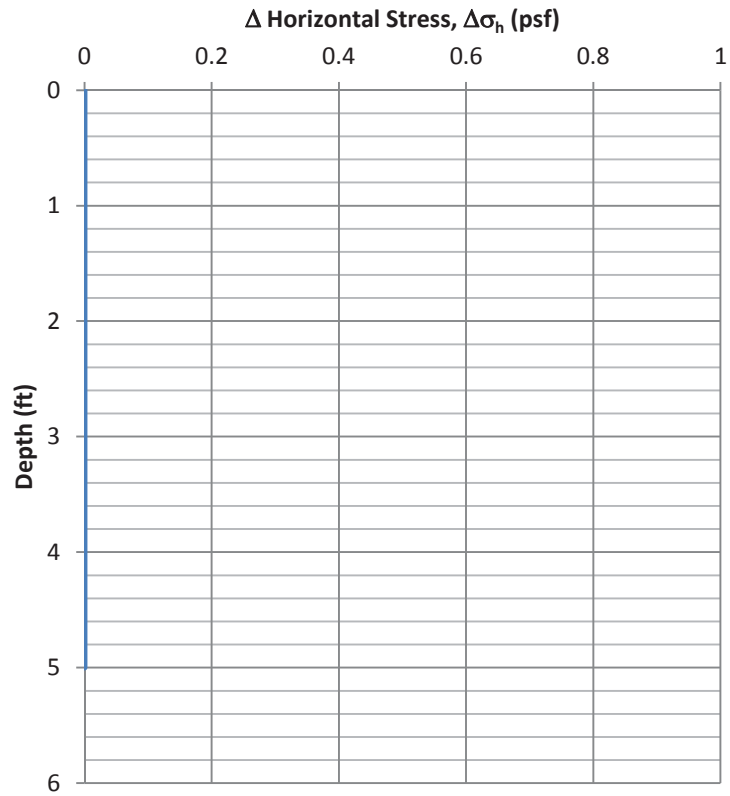

* From USS Steel Sheet Piling Design Manual, 1984, U.S. Department of Transportation /FHWA

Total Horizontal Force:

F_H = 496.0 lbf/ft

Total Vertical Force:

F_V = -11.66 lbf/ft

Wall Weight *:

W_1 =	2,994	lbf/ft
W_2 =	1,847	lbf/ft
W_3 =	0	lbf/ft
W_4 =	0	lbf/ft
W_5 =	0	lbf/ft
W_6 =	0	lbf/ft
W_7 =	0	lbf/ft
W_8 =	0	lbf/ft
ΣW_i =	4,840	lbf/ft

Wall Weight Centroids:

x_1 =	1.75	ft
x_2 =	3.25	ft
x_3 =	2.28	ft
x_4 =	2.28	ft
x_5 =	2.28	ft
x_6 =	2.28	ft
x_7 =	2.28	ft
x_8 =	2.28	ft
y_{bar} =	2.09	ft
x'	0.50	ft

* Rock weights based on data presented in Table 1 [pg. 9] (Mack et al., 2006)

Frictional Resistance:

F_μ = 3380.1 lbf/ft

K_P = 3.39 Use Passive? **N** (Enter "N" for no and "Y" for Yes)

F_P = 0.0 lbf/ft (Only Used in External Sliding/OT)

Factor of Safety against External Sliding:

FS_{SL} = 6.9 **OK** ←

Factor of Safety against External Overturning:

M_o = 1269.0 lbf-ft/ft M_r = 11191.0 lbf-ft/ft

$\Sigma W_i * x_i$ = 11241 lbf-ft/ft **FS_{OT} =** 8.9 **OK** ←

Factor of Safety against Individual Rock Overturning/Sliding: (Mack et al., 2006)

Boulder	H' (ft)	B' (ft)	ΣW_i	$\Sigma W_i * x_i$	M_o	M_r	**FS_{OT}**	**FS_{SL}**	
2.0	2.1	3.0	1,847	5,078	471	5,070	10.77	2.21	**OK**
3.0	0.0	0.0	0	0	0	0			
4.0	0.0	0.0	0	0	0	0			
5.0	0.0	0.0	0	0	0	0			
6.0	0.0	0.0	0	0	0	0			
7.0	0.0	0.0	0	0	0	0			
8.0	0.0	0.0	0	0	0	0			

Factor of Safety against Bearing Capacity:

e_{max} = 0.583

e_s = -0.305 **OK** ←

q_{max} = 2100.6 psf

Meyerhof Bearing Capacity Equation:

q = 62.5 psf B' = 2.89 ft

L = 100 ft L '= 99.39 ft

Shape Factors:

s_c = 1.020

s_q = 1.010

s_γ = 1.010

Depth Factors:

d_c = 1.064

d_q = 1.032

d_γ = 1.032

Bearing Capacity Factors:

N_q = 26.092

N_c = 38.638

N_γ = 26.166

Reduction Factor for Wide Footings:

κ (ft) = 6

r_γ = 1.00

q_{ult} = 10,816 psf

FS_{BC} = 5.2 **OK** ←

Seismic Earth Pressure Coefficient:

Design Ground acceleration (7% in 75 years) [Mack et al., 2006]

AASHTO Standard Design Specifications for Bridges

A =	0.498			
k_h =	0.21	Use 1/2 of A?	N	(Mack et al., 2006)
k_v =	0			(If "N" then use displacement-factored k_h [see below])
θ =	11.70			
K_{AE} =	0.253			

	AASHTO 11.6.5	Kavazajian et al*	
allowable displacement (d):		5	in.
displacement-factored k_h:		0.21	g

* Kavazanjian, E., Matasovic, N., Hadj-Hamou, T. and Sabatini, P.J., Geotechnical Engineering Circular #3 – Design Guidance: Geotechnical Earthquake Engineering for Highways, Volume 1 – Design Principles, FHWA-SA-97-076, 1997

Seismic Surcharge Pressure:

F_A =	146.5	lbf/ft
F_{AE} =	320.4	lbf/ft
ΔF_{AE} =	173.9	lbf/ft

Factor of Safety against Seismic Overturning:

$M_{o,s}$ =	3834.4	lbf-ft/ft	
$M_{r,s}$ =	11123.9	lbf-ft/ft	
$FS_{OT,s}$ =	3.0	**OK**	←

Factor of Safety against Seismic Sliding:

$F_{H,S}$ =	1671.4		
$F_{R,S}$ =	3370.4		
$FS_{SL,s}$ =	2.1	**OK**	←

Factor of Safety against Seismic Bearing Capacity:

e_s =	0.236		
$q_{max,s}$ =	1932	psf	
FS_{BC} =	5.6	**OK**	←

Failure Mechanism	FS Requir	FS Obtained	OK
External Sliding	**1.5**	**6.9**	**OK**
External Overturning	**2.0**	**8.9**	**OK**
Individual Rock Overturning	**2.0**	**10.8**	**OK**
Individual Rock Sliding	**1.5**	**2.2**	**OK**
Bearing Capacity	**2.0**	**5.2**	**OK**
Seismic Overturning	**1.5**	**3.0**	**OK**
Seismic Sliding	**1.1**	**2.1**	**OK**
Seismic Bearing Capacity	**1.5**	**5.6**	**OK**

DESIGN METHODOLOGY AS PER:
MACK, D.A., SANDERS, S.H., MILLHONE, W.L., FIPPIN, R.L., AND KENNEDY, D.G., 2006, ROCKERY DESIGN AND CONSTRUCTION GUIDELINES, SANDERS & ASSOCIATES GEOSTRUCTURAL ENGINEERING, INC., REPORT NO. FHWA-CFL/TD-06-006, REPORT DATED NOVEMBER 2006.

SECTION C

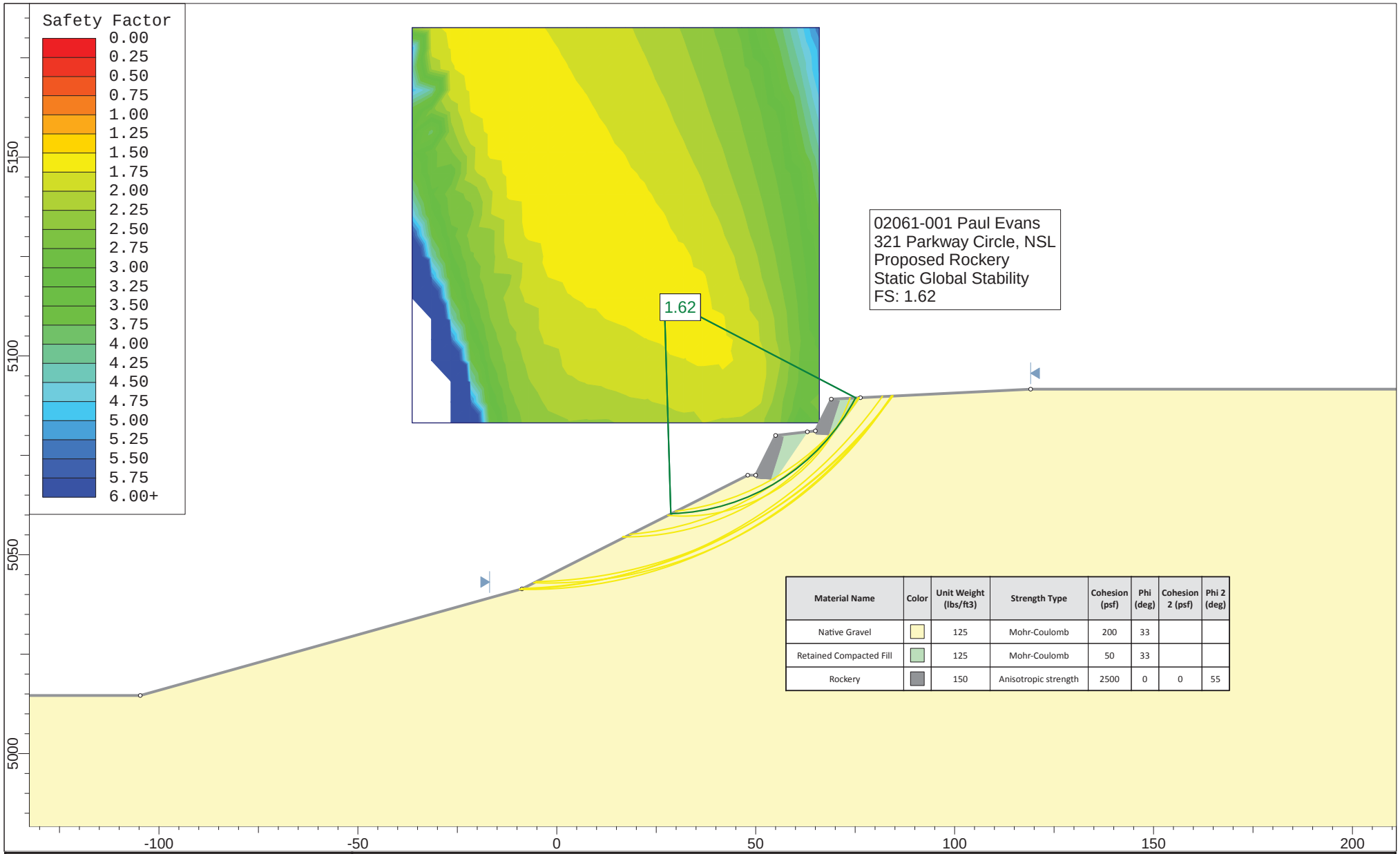

Material Name	Color	Unit Weight (lbs/ft3)	Strength Type	Cohesion (psf)	Phi (deg)	Cohesion 2 (psf)	Phi 2 (deg)
Native Gravel		125	Mohr-Coulomb	200	33		
Retained Compacted Fill		125	Mohr-Coulomb	50	33		
Rockery		150	Anisotropic strength	2500	0	0	55

IGES®

SLIDEINTERPRET 6.029

Project	Evans Rockery		
Analysis Description	Method : Spencer		
Drawn By	JKW	*Company*	IGES, Inc.
Date	1-23-15	*File Name*	Maximum Section.slim

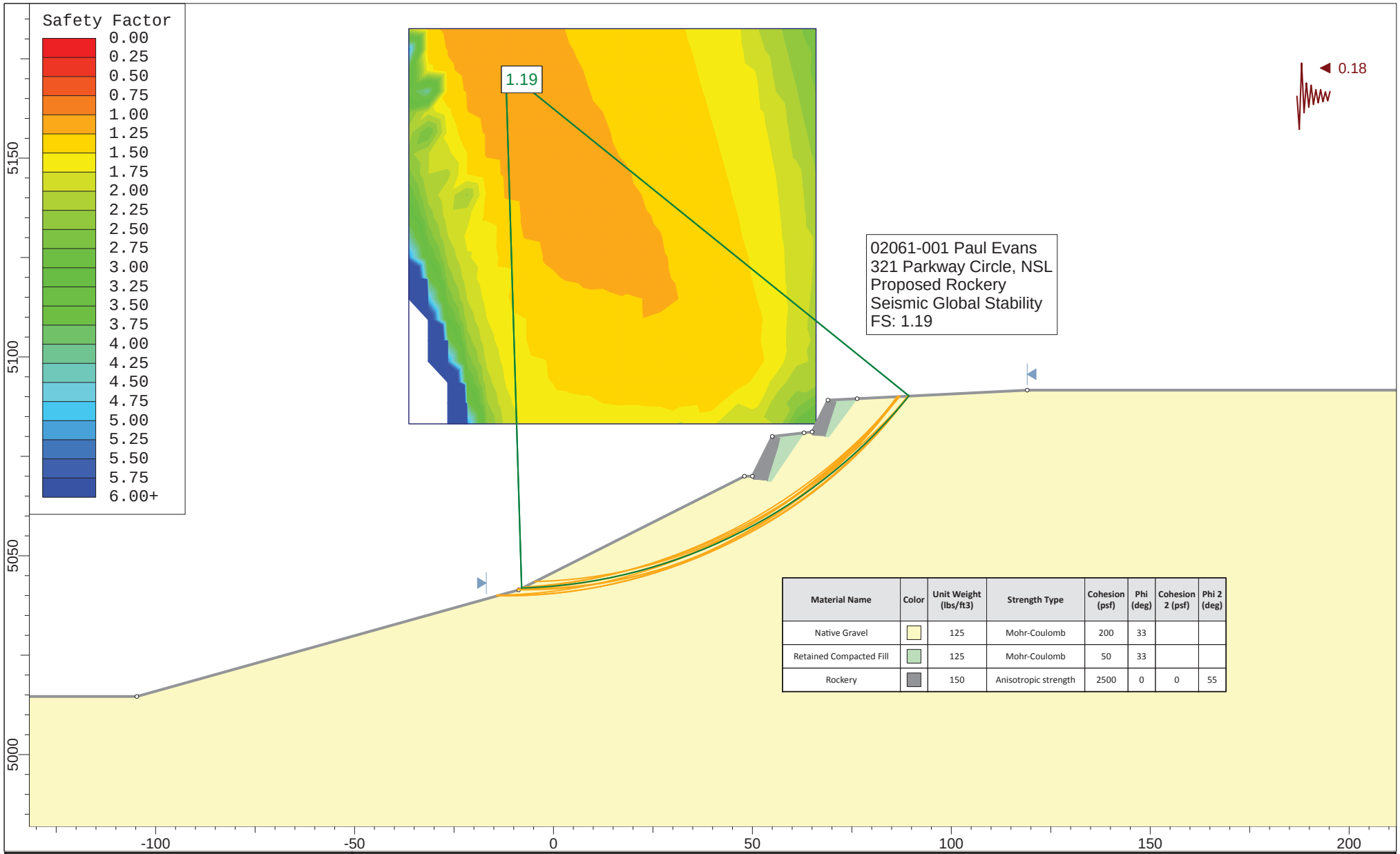

Material Name	Color	Unit Weight (lbs/ft3)	Strength Type	Cohesion (psf)	Phi (deg)	Cohesion 2 (psf)	Phi 2 (deg)
Native Gravel		125	Mohr-Coulomb	200	33		
Retained Compacted Fill		125	Mohr-Coulomb	50	33		
Rockery		150	Anisotropic strength	2500	0	0	55

IGES®

SLIDEINTERPRET 6.029

Project	Evans Rockery		
Analysis Description	Method : Spencer		
Drawn By	JKW	*Company*	IGES, Inc.
Date	1-23-15	*File Name*	Maximum Section.slim

USGS Design Maps Summary Report

User–Specified Input

Report Title 321 Parkway Circle, NSL, UT
Wed February 18, 2015 16:28:15 UTC

Building Code Reference Document 2009 AASHTO Guide Specifications for LRFD Seismic Bridge Design

(which utilizes USGS hazard data available in 2002)

Site Coordinates 40.8269°N, 111.9035°W

Site Soil Classification Site Class D – "Stiff Soil"

USGS–Provided Output

PGA =	0.495 g	**A_s =**	0.498 g
S_S =	1.136 g	**S_{DS} =**	1.188 g
S_1 =	0.438 g	**S_{D1} =**	0.684 g

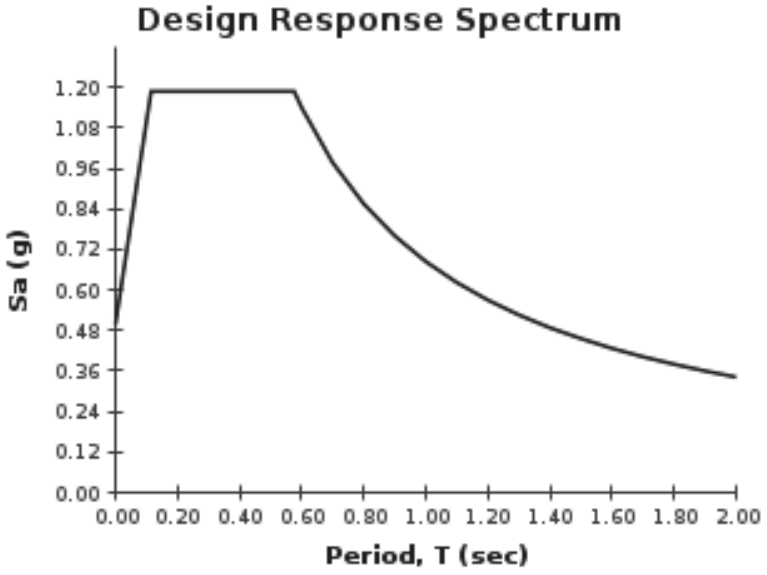

Although this information is a product of the U.S. Geological Survey, we provide no warranty, expressed or implied, as to the data contained therein. This tool is not a substitute for technical subject-matter knowledge.

SECTION D

Direct Shear Test for Soils Under Drained Conditions

(ASTM D3080)

© IGES 2009, 2015

Project: Paul Evans
No: 02061-001
Location: 321 Parkway Circle, NSL
Date: 1/23/2015
By: JDF

Boring No.:
Sample: Sample 2
Depth:
Sample Description: Brown sand with gravel
Sample type: Undisturbed-trimmed from thin-wall

Test type: Inundated
Lateral displacement (in.): 0.3
Shear rate (in./min): 0.0200
Specific gravity, Gs: 2.65 Assumed

	Sample 1		Sample 2		Sample 3	
Nominal normal stress (psf)	2000		1000		500	
Peak shear stress (psf)	3278		1962		2489	
Lateral displacement at peak (in)	0.212		0.257		0.297	
Load Duration (min)	146		129		163	
	Initial	Pre-shear	Initial	Pre-shear	Initial	Pre-shear
Sample height (in)	1.0000	0.9866	1.0000	0.9905	1.0000	0.9896
Sample diameter (in)	2.416	2.416	2.416	2.416	2.416	2.416
Wt. rings + wet soil (g)	929.05	954.72	925.86	952.21	920.05	949.50
Wt. rings (g)	803.84	803.84	801.64	801.64	804.02	804.02
Wet soil + tare (g)	324.06		324.06		324.06	
Dry soil + tare (g)	320.95		320.95		320.95	
Tare (g)	120.97		120.97		120.97	
Water content (%)	1.6	22.4	1.6	23.1	1.6	27.3
Dry unit weight (pcf)	102.5	103.8	101.6	102.6	94.9	95.9
Void ratio, e, for assumed Gs	0.61	0.59	0.63	0.61	0.74	0.72
Saturation (%)*	6.7	100.0	6.6	100.0	5.6	100.0

ϕ' (deg)	33	Average of 3 samples	Initial	Pre-shear
c' (psf)	1831	Water content (%)	1.6	24.3
		Dry unit weight (pcf)	99.7	100.8

*Pre-shear saturation set to 100% for phase calculations

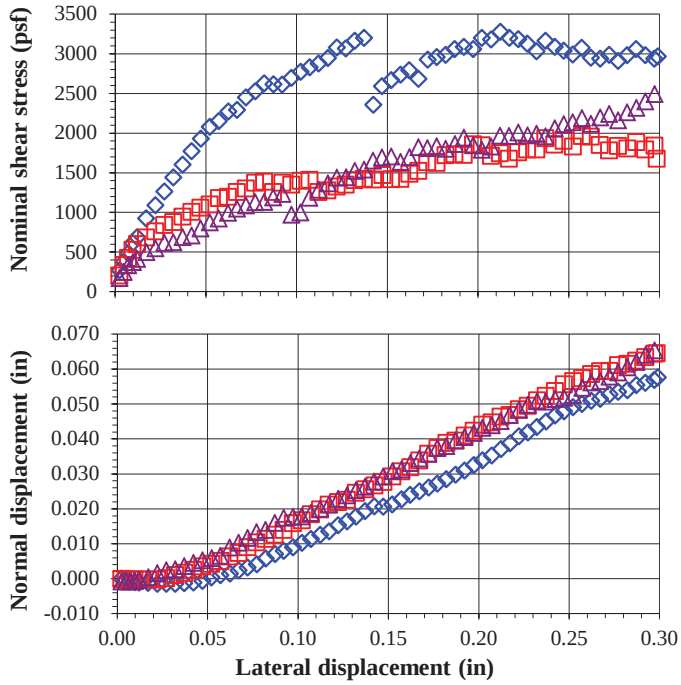

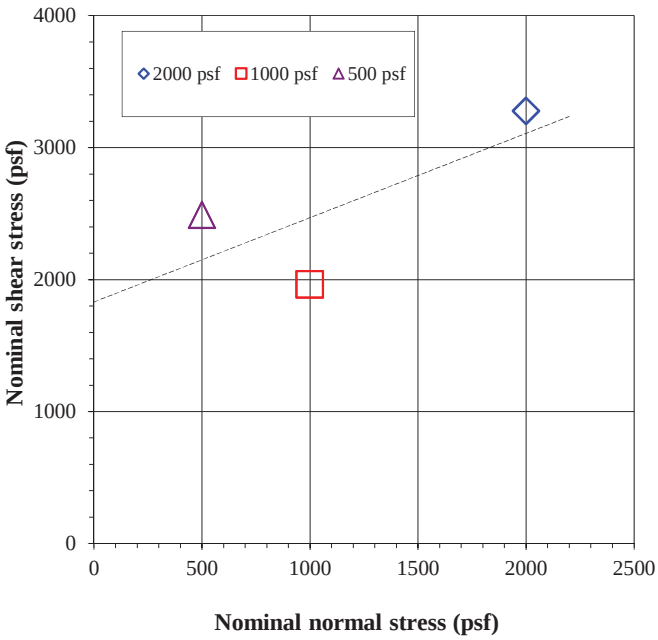

Comments:
Specimens contained plus No. 4 material.

Entered by:_____
Reviewed:_____

Z:\PROJECTS\02061_Paul_Evans\001_Parkway_Circle\[DS_GCv4.xlsm]1

Direct Shear Test for Soils Under Drained Conditions

(ASTM D3080)

© IGES 2009, 2015

Project: Paul Evans
No: 02061-001
Location: 321 Parkway Circle, NSL

Boring No.:
Sample: Sample 2
Depth:

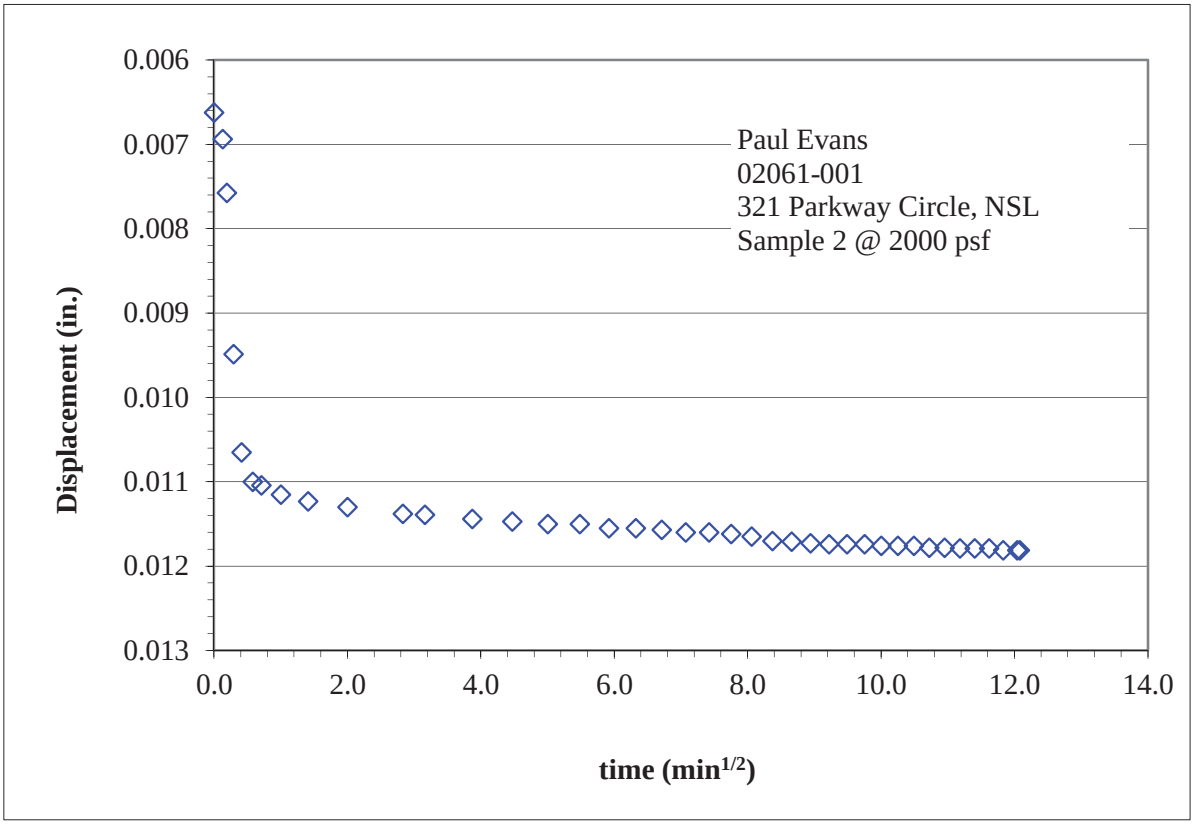

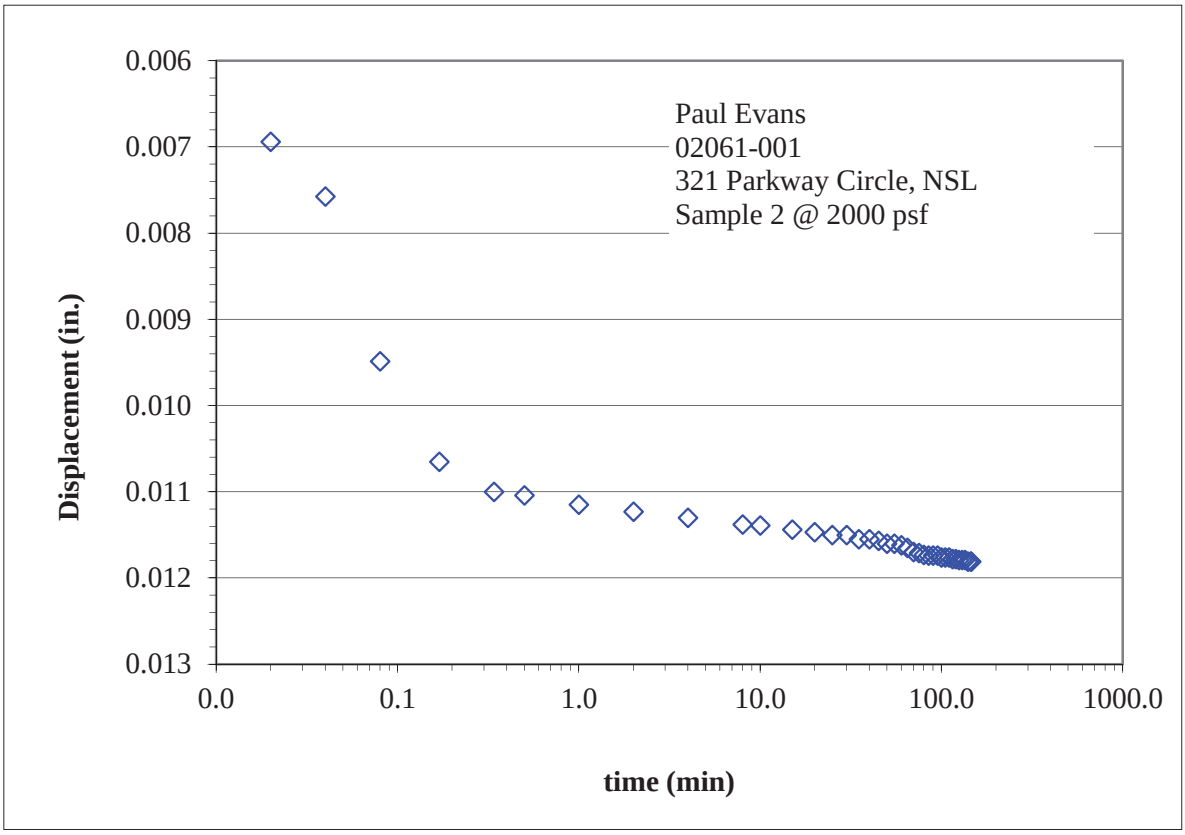

NOTES:

1. THIS GRADING PLAN IS BASED ON A 2:1 SLOPE AS SPECIFIED BY NORTH SALT LAKE AS THE ACCEPTABLE GRADE, AND THAT IT IS DESIGNED TO TIE SEAMLESSLY INTO THE GILSON GRADING PLAN.

2. ALL UTILITY AND ROADWAY WORK SHALL MEET NORTH SALT LAKE STANDARDS.

3. SEE SHEETS GR2–GR5 FOR PROFILES OF SECTIONS SHOWN ON THIS SHEET (GR1).

Rev.	By	Date	Remarks
B	JJS	03/03/15	REVIEW
A	JJS	02/24/15	REVIEW

SKY PROPERTIES

EAGLEPOINTE ESTATES

GRADING PLAN

BINGHAM ENGINEERING
SALT LAKE CITY - (801) 532-2520
OGDEN - (801) 399-1662

Dsn: ____
Drw: JJS
Chk: JRL
Rvw: JRL

Sht GR1 of 5

Print Date: 03/03/2015 | Created: 02/24/15 | Proj. # 5263

Copyright © 2013 Bingham Engineering, Inc. Drawing not to be reused in part or in whole without written permission.

C:\5101\5101 Proj\dwg\5263\5263 Upper Cross-sections.dwg Bingham Engineering

WALL 1:1 (2)

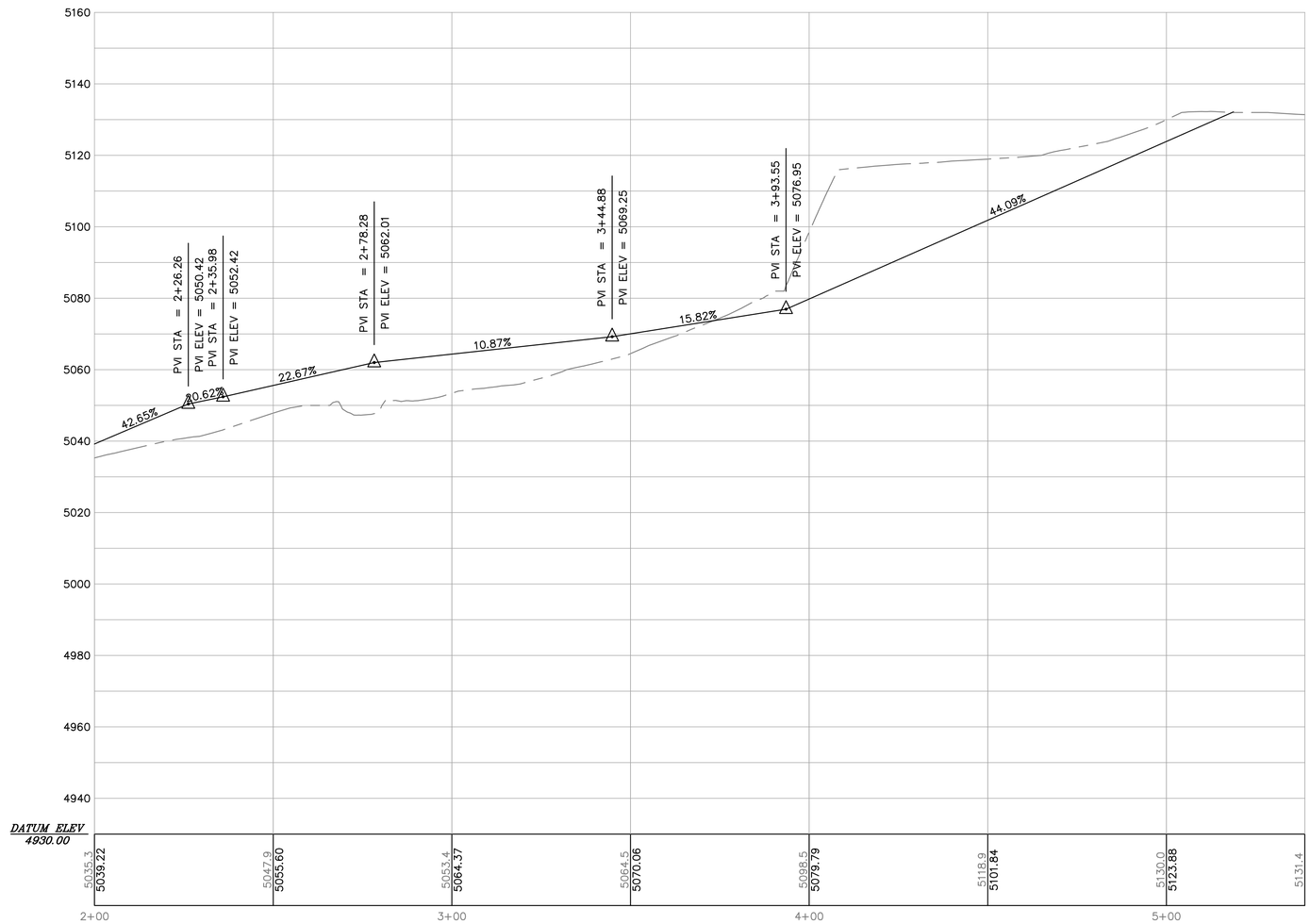

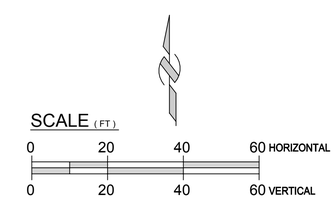

SKY PROPERTIES

EAGLEPOINTE ESTATES

PROFILE

WALL 1:1 (2)

STA:2+00 TO STA:5+39

BINGHAM ENGINEERING
SALT LAKE CITY - (801) 532-2520
OGDEN - (801) 399-1662

Dsn: ____
Drw: JJS
Chk: JRL
Rvw: JRL

Sht GR2 of 5

Print Date: 03/03/2015 | Created: 02/24/15 | Proj. # 5263

Copyright © 2013 Bingham Engineering, Inc. Drawing not to be reused in part or in whole without written permission.

C:\5101\5101 Proj\dwg\5263\5263 Upper Cross-sectio.dwg Bingham Engineering

Rev.	By	Date	Remarks
B	JJS	03/03/15	REVIEW
A	JJS	02/24/15	REVIEW

WALL 1:1 (3)

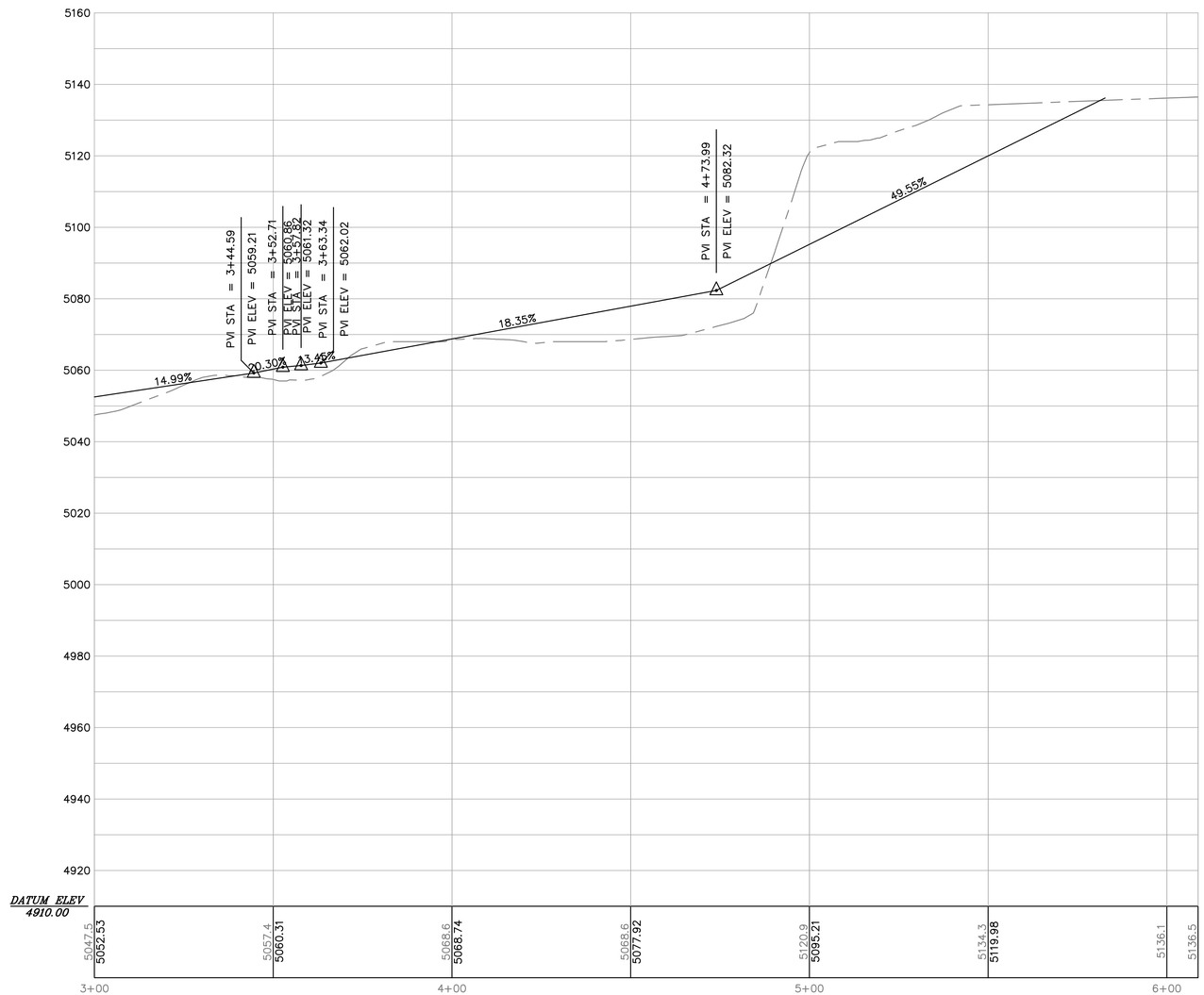

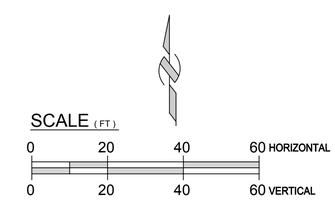

SKY PROPERTIES

EAGLEPOINTE ESTATES

PROFILE

WALL 1:1 (3)

STA:3+00 TO STA:6+09

BINGHAM ENGINEERING
SALT LAKE CITY - (801) 532-2520
OGDEN - (801) 399-1662

Dsn: ____
Drw: JJS
Chk: JRL
Rvw: JRL

Sht GR3 of 5

Print Date: 03/03/2015 | Created: 02/24/15 | Proj. # 5263

Copyright © 2013 Bingham Engineering, Inc. Drawing not to be reused in part or in whole without written permission.

C:\5101\5101 Proj\dwg\5263\5263 Upper Cross-section.dwg Bingham Engineering

Rev.	By	Date	Remarks
B	JJS	03/03/15	REVIEW
A	JJS	02/24/15	REVIEW

PARKING LOT (1)

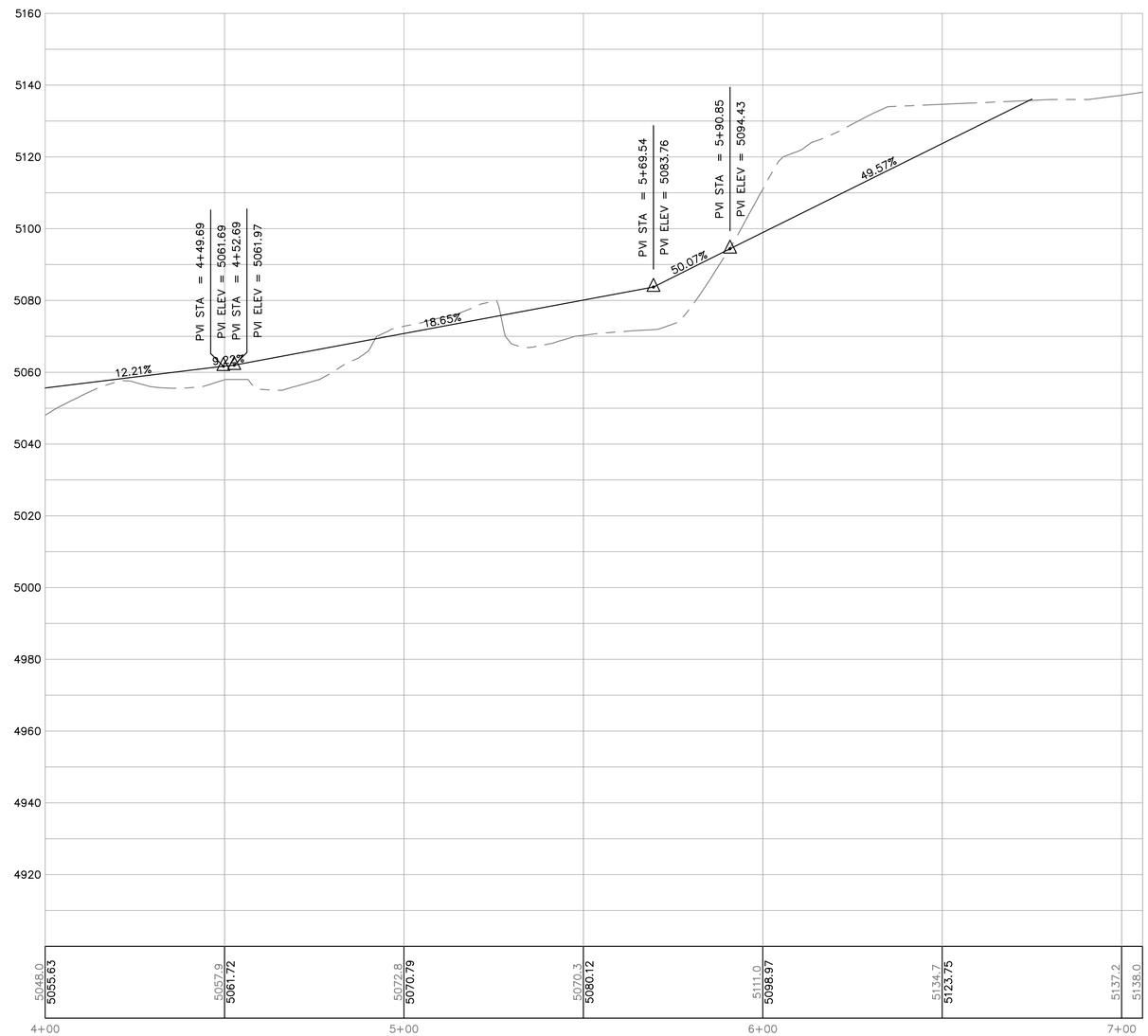

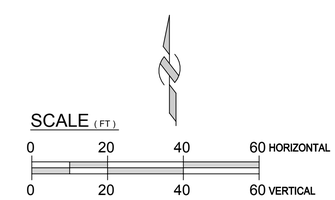

SKY PROPERTIES

EAGLEPOINTE ESTATES

PROFILE

PARKING LOT (1)

STA:4+00 TO STA:7+00

BINGHAM ENGINEERING
SALT LAKE CITY - (801) 532-2520
OGDEN - (801) 399-1662

Dsn: ____
Drw: JJS
Chk: JRL
Rvw: JRL

Sht GR4 of 5

Print Date: 03/03/2015 | Created: 02/24/15 | Proj. # 5263

Copyright © 2013 Bingham Engineering, Inc. Drawing not to be reused in part or in whole without written permission.

C:\5101\5101 Proj\dwg\5263\5263 Upper Cross-sections.dwg Bingham Engineering

Rev.	By	Date	Remarks
B	JJS	03/03/15	REVIEW
A	JJS	02/24/15	REVIEW

PARKING LOT (2)

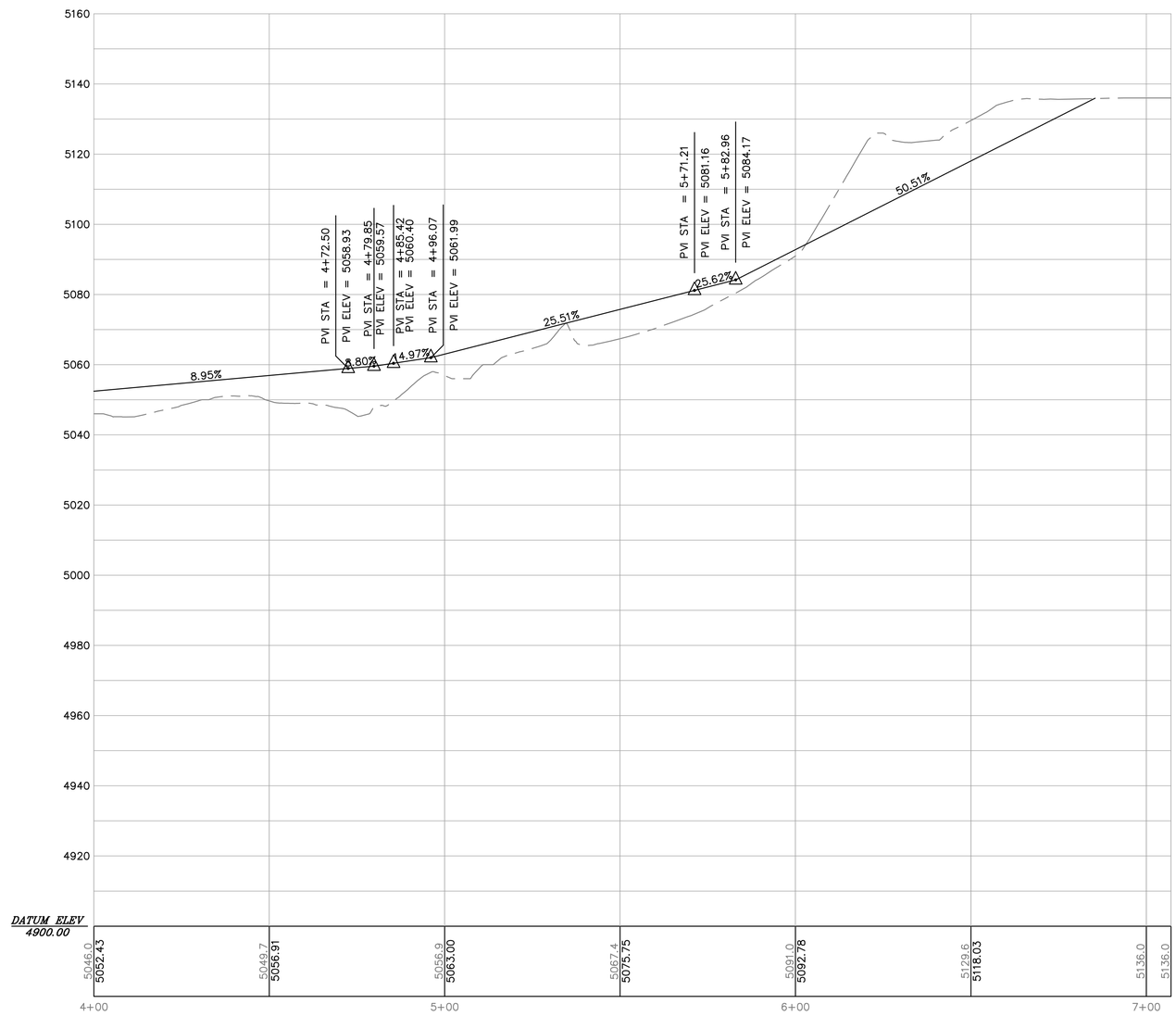

SCALE (FT)

0 20 40 60 HORIZONTAL

0 20 40 60 VERTICAL

SKY PROPERTIES

EAGLEPOINTE ESTATES

PROFILE

PARKING LOT (2)

STA:4+00 TO STA:7+15

BINGHAM ENGINEERING

SALT LAKE CITY - (801) 532-2520

OGDEN - (801) 399-1662

Dsn: ____ Drw: JJS Chk: JRL Rvw: JRL

Sht GR5 of 5

Rev.	By	Date	Remarks
B	JJS	03/03/15	REVIEW
A	JJS	02/24/15	REVIEW

Print Date: 03/03/2015 | Created: 02/24/15 | Proj. # 5263

Copyright © 2013 Bingham Engineering, Inc. Drawing not to be reused in part or in whole without written permission.

C:\5101\5101 Proj\dwg\5263\5263 Upper Cross-section.dwg Bingham Engineering

EAGLEPOINTE ESTATES
UTILITY/ROAD IMPROVEMENTS
FEBRUARY 2015

LOCATED IN SECTION 13, TOWNSHIP 1 NORTH, RANGE 1 WEST, SALT LAKE BASE AND MERIDIAN, NORTH SALT LAKE, DAVIS COUNTY, UTAH

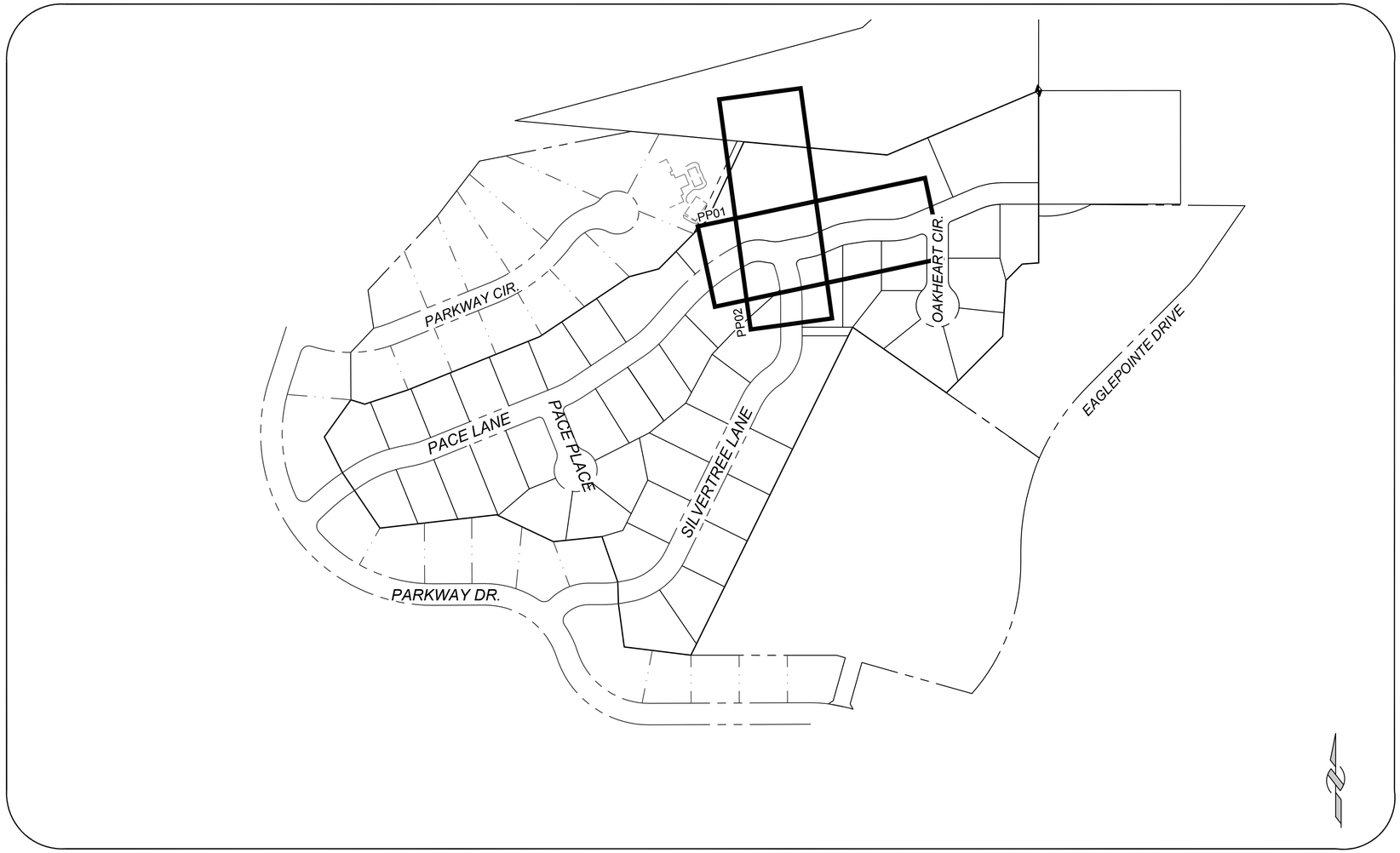

NOTES

1. The Owner/Developer of the project is Sky Properties. Steve Israelsen is the project manager. The office number is (801) 292–1400.

2. The Engineer for the project is Bingham Engineering. Judd Lawrence is the prime contact regarding design, surveying, and revisions. He can be reached at 801–532–2520.

3. All road, water, storm drain and secondary water construction shall conform to the requirements of North Salt Lake. Paul Ottoson is the City Engineer. The North Salt Lake City office number is 801–335–8700. Coordinate all inspections and testing with North Salt Lake.

4. All sewer construction shall conform to the requirements of the South Davis Sewer District (SDSD). The office number is 801–295–3469. Coordinate all sewer testing and inspections with SDSD.

5. Contractor to contact Blue Stakes (532–5000) prior to any excavation.

6. Deborah Rauhe is the planner for Rocky Mountain Power. Her number is 801–220–7278.

7. Troy Garner is the planner for Questar. His number is 801–324–3781.

8. Gary Weaver is the planner for CenturyLink. His number is 801–626–5380.

9. The benchmark for this development shall be brass cap monument at Pace Lane and Parkway Drive. The elevation is 5085.90.

INDEX OF DRAWINGS

G1 TITLE SHEET

–PLAN AND PROFILE SHEETS–

PAGE	DESCRIPTION	STATION RANGE
PP01	PACE LANE	30+00 – 35+00
PP02	SILVERTREE LANE	18+00 – 19+92.38
P03	UTILITY REMOVAL	

–DETAIL SHEETS–

PAGE	DESCRIPTION
D1	ROAD DETAILS
D2	STORM DRAIN DETAILS
D3	STORM DRAIN DETAILS
D4	SANITARY SEWER DETAILS
D5	SANITARY SEWER DETAILS
D6	CULINARY WATER DETAILS
D7	SECONDARY WATER DETAILS

NOTICE TO CONTRACTORS

IT SHALL BE THE RESPONSIBILITY OF CONTRACTOR TO CONTACT 'BLUE STAKES' UTILITY LOCATION CENTER AT 1–800–662–4111, AT LEAST TWO WORKING DAYS PRIOR TO THE COMMENCEMENT OF ANY EXCAVATION ACTIVITIES.

SITE DEVELOPED BY:
EAGLEPOINTE DEVELOPMENT, L.C.
585 W. 500 S. SUITE 110
BOUNTIFUL, UT 84010
PH: (801) 292-1400

EAGLEPOINTE ESTATES UTILITY/ROAD IMPROVEMENTS
CONSTRUCTION DRAWINGS

01/05/2015 Bingham\Eagle\EngProj\dwg\5263\5263 TITLE–INDEX.dwg

LICENSED PROFESSIONAL ENGINEER No. 5150191-2202 JEREMY J. SHAFFER STATE OF UTAH

REV.	DATE	DESCRIPTION
C	2/19/15	ISSUED FOR BID
B	2/17/15	ISSUED FOR REVIEW
A	1/5/15	CITY REVIEW

SCALE
0 150 300 450
Scale in Feet

EAGLEPOINTE ESTATES
VICINITY MAP & INDEX SHEET

PREPARED BY:
BINGHAM ENGINEERING
5160 WILEY POST WAY
SALT LAKE CITY, UTAH 84116
(801) 532–2520

APPROVED CITY ENGINEER DATE

Sht G1 of 1

TBC CURVE TABLE			
CURVE	DELTA	LENGTH	RADIUS
C1	38°53'07"	61.76'	91.00'
C2	22°47'01"	33.40'	84.00'
C3	11°22'36"	16.68'	84.00'
C4	13°44'54"	29.03'	121.00'
C5	8°46'08"	17.75'	116.00'
C6	38°53'07"	40.04'	59.00'
C7	6°26'08"	13.03'	116.00'
C8	67°17'38"	23.49'	20.00'
C9	96°08'34"	33.56'	20.00'
C10	11°22'36"	23.03'	116.00'
C11	13°44'54"	21.36'	89.00'
C12	8°46'08"	12.86'	84.00'

NOTE: SEE SHEET P03 FOR ALL UTILITY REMOVAL

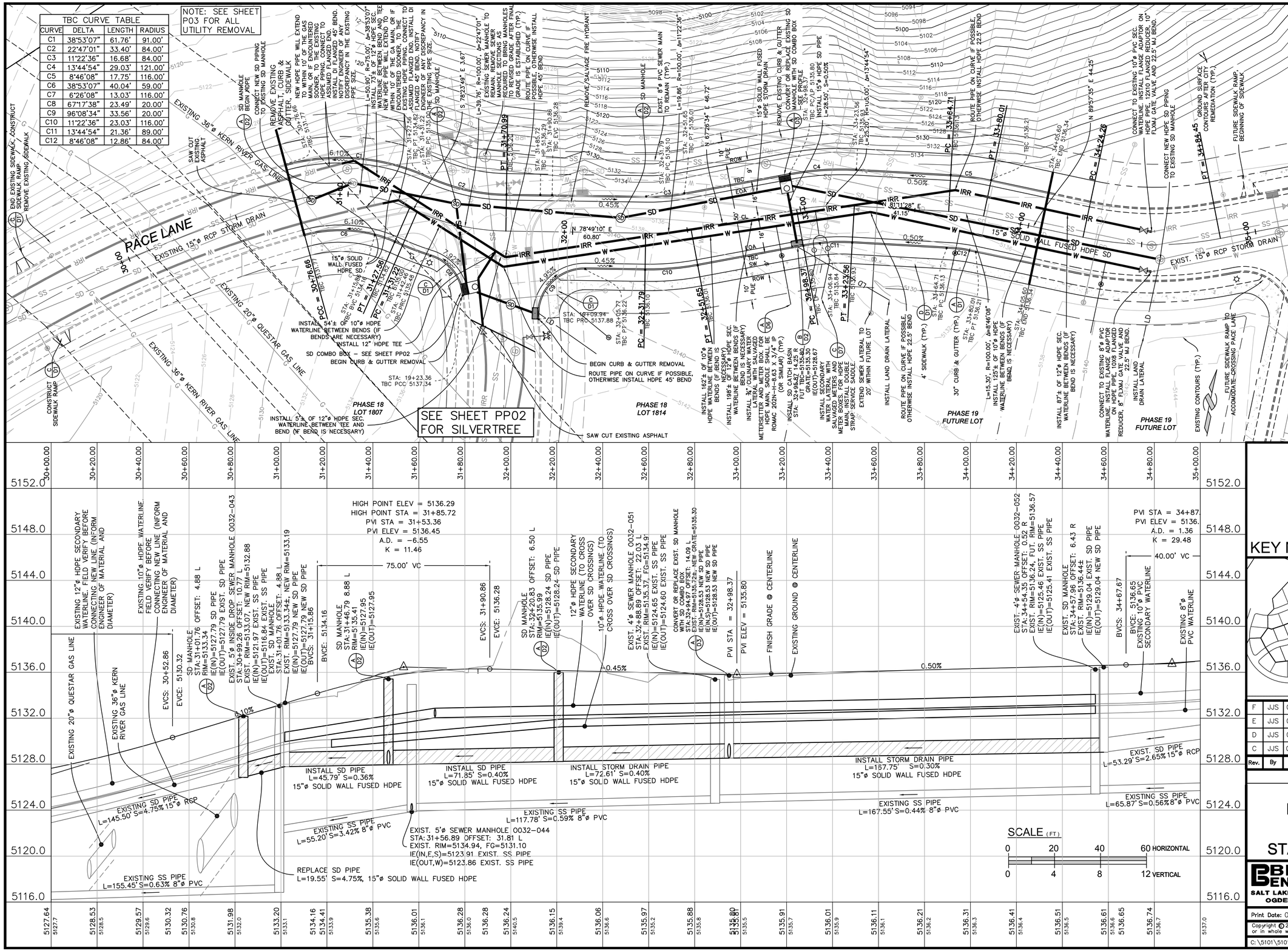

NOTES:

1. POWER, GAS, CABLE AND PHONE WILL BE LOCATED IN 10' PUE IN FRONT OF EACH LOT. LOCATIONS OF ANY UTILITIES IN SIDE YARD EASEMENTS WILL BE SPECIFICALLY IDENTIFIED.

LEGEND

- PROPOSED HDPE WATERLINE
- PROPOSED PVC WATERLINE
- EXISTING HDPE WATERLINE
- EXISTING PVC WATERLINE
- REMOVE WATERLINE
- PROPOSED SANITARY SEWER
- EXISTING SANITARY SEWER
- REMOVE SEWER
- PROPOSED STORM DRAIN
- EXISTING STORM DRAIN
- REMOVE STORM DRAIN
- PROPOSED HDPE SEC. WATER
- PROPOSED PVC SEC. WATER
- EXISTING HDPE SEC. WATER
- EXISTING PVC SECONDARY WATER
- REMOVE SEC. WATER
- PROPOSED LAND DRAIN
- EXISTING LAND DRAIN
- REMOVE LAND DRAIN
- FUTURE CURB AND GUTTER
- EXISTING CURB AND GUTTER
- REMOVE CURB AND GUTTER
- FUTURE SIDEWALK
- EXISTING SIDEWALK
- PROPOSED CENTERLINE
- FUTURE CENTERLINE
- EXISTING CENTERLINE
- SECTION BOUNDARY
- FUTURE ROW
- EXISTING RIGHT OF WAY
- LOT LINE
- CROSS FITTING
- ELBOW FITTING
- TEE FITTING
- SECONDARY WATER METER
- PROPOSED STREET LIGHT
- SEWER MANHOLE
- STORM DRAIN MANHOLE
- CURB INLET BOX
- WATER METER
- FIRE HYDRANT
- WATER VALVE

LICENSED PROFESSIONAL ENGINEER No. 5150191-2202 JEREMY J. SHAFFER STATE OF UTAH

KEY MAP

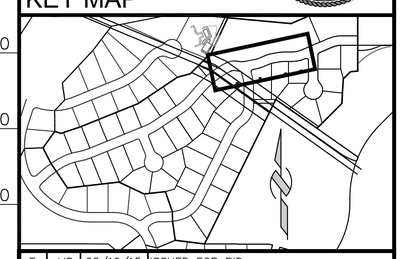

Rev.	By	Date	Remarks
F	JJS	02/19/15	ISSUED FOR BID
E	JJS	02/17/15	ISSUED FOR REVIEW
D	JJS	02/12/15	REVIEW
C	JJS	02/04/15	REVIEW

SKY PROPERTIES

EAGLEPOINTE ESTATES
PLAN AND PROFILE
PACE LANE
STA:30+00 TO STA:35+00

BINGHAM ENGINEERING
SALT LAKE CITY - (801) 532-2520
OGDEN - (801) 399-1662

Dsn: JJS Drw: JJS Chk: JRL Rvw: JRL

Sht PP01 of 3

Print Date: 02/19/2015 Created: 12/29/14 Proj. # 5263

Copyright © 2013 Bingham Engineering, Inc. Drawing not to be reused in part or in whole without written permission.

C:\5101\5101 Proj\dwg\5263\5263 PACE PLPF.dwg Bingham Engineering

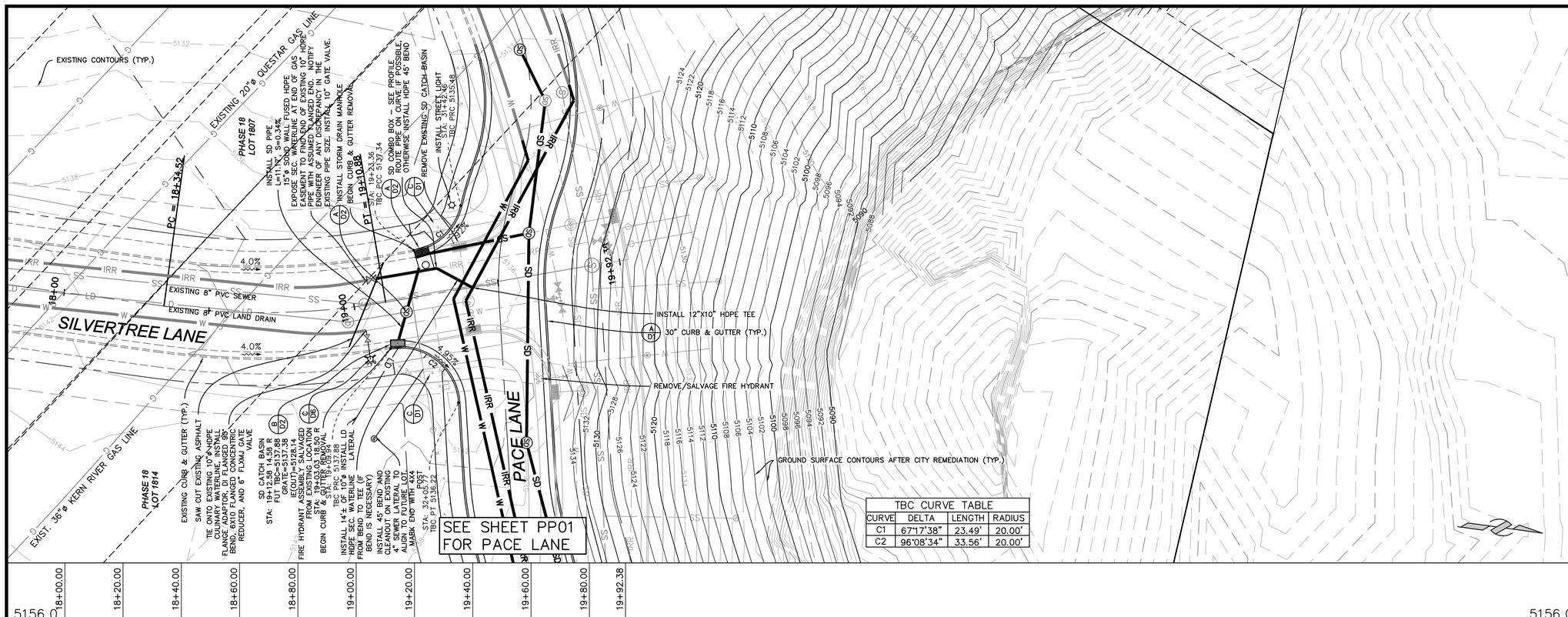

TBC CURVE TABLE			
CURVE	DELTA	LENGTH	RADIUS
C1	67°17'38"	23.49'	20.00'
C2	96°08'34"	33.56'	20.00'

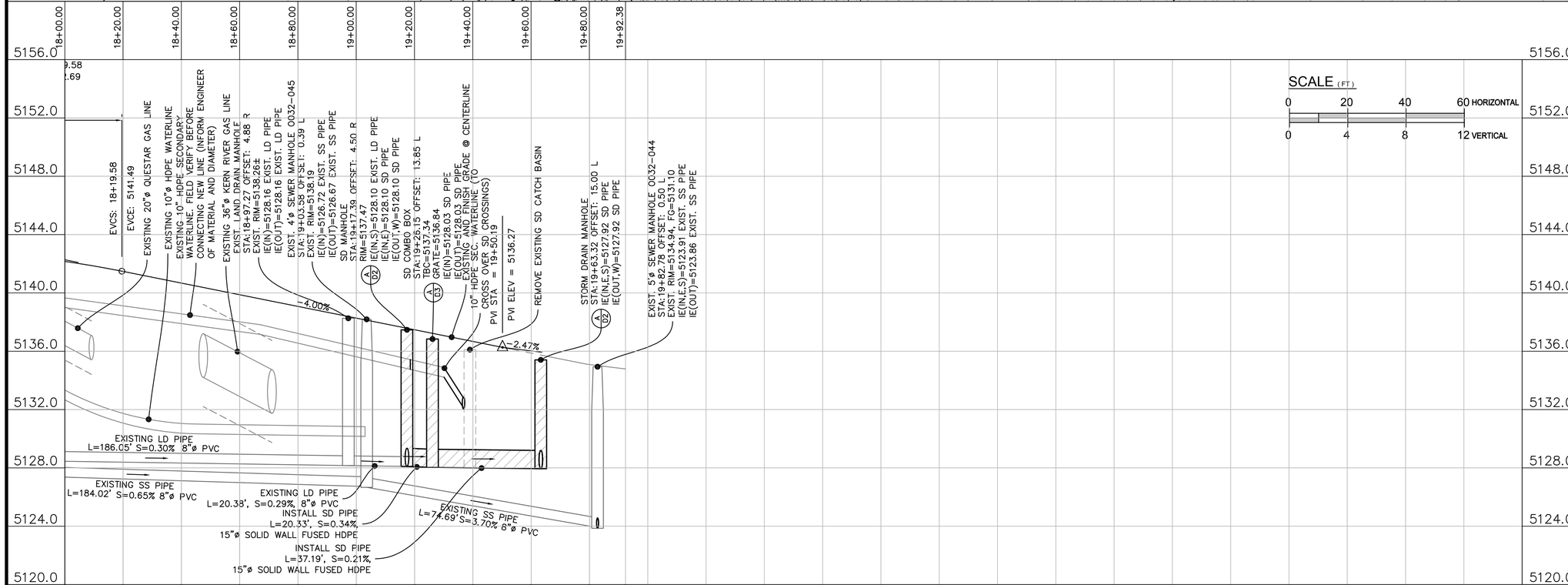

SCALE (FT)

0 20 40 60 HORIZONTAL

0 4 8 12 VERTICAL

NOTES:

1. POWER, GAS, CABLE AND PHONE WILL BE LOCATED IN 10' PUE IN FRONT OF EACH LOT. LOCATIONS OF ANY UTILITIES IN SIDE YARD EASEMENTS WILL BE SPECIFICALLY IDENTIFIED.

LEGEND

- W — PROPOSED HDPE WATERLINE
- W — PROPOSED PVC WATERLINE
- W — EXISTING HDPE WATERLINE
- W — EXISTING PVC WATERLINE
- W — REMOVE WATERLINE
- SS — PROPOSED SANITARY SEWER
- SS — EXISTING SANITARY SEWER
- SS — REMOVE SEWER
- SD — PROPOSED STORM DRAIN
- SD — EXISTING STORM DRAIN
- SD — REMOVE STORM DRAIN
- IRR — PROPOSED HDPE SECONDARY WATE
- IRR — PROPOSED PVC SECONDARY WATER
- IRR — EXISTING HDPE SECONDARY WATER
- IRR — EXISTING PVC SECONDARY WATER
- IRR — REMOVE SECONDARY WATER
- LD — PROPOSED LAND DRAIN
- LD — EXISTING LAND DRAIN
- LD — REMOVE LAND DRAIN
- FUTURE CURB AND GUTTER
- EXISTING CURB AND GUTTER
- REMOVE CURB AND GUTTER
- FUTURE SIDEWALK
- EXISTING SIDEWALK
- PROPOSED CENTERLINE
- FUTURE CENTERLINE
- EXISTING CENTERLINE
- SECTION BOUNDARY
- FUTURE ROW
- EXISTING RIGHT OF WAY
- LOT LINE
- SEWER MANHOLE
- STORM DRAIN MANHOLE
- CURB INLET BOX
- WATER METER
- FIRE HYDRANT
- WATER VALVE
- CROSS FITTING
- ELBOW FITTING
- TEE FITTING
- SECONDARY WATER METER
- PROPOSED STREET LIGHT

LICENSED PROFESSIONAL ENGINEER No. 5150191-2202 JEREMY J. SHAFFER STATE OF UTAH

KEY MAP

Rev.	By	Date	Remarks
E	JJS	02/19/15	ISSUED FOR BID
D	JJS	02/17/15	ISSUED FOR REVIEW
C	JJS	02/04/15	REVIEW
B	JJS	02/02/15	REVIEW

SKY PROPERTIES

EAGLEPOINTE ESTATES

PLAN AND PROFILE

SILVERTREE LANE

STA:18+00 TO STA:19+92.38

BINGHAM ENGINEERING
SALT LAKE CITY - (801) 532-2520
OGDEN - (801) 399-1662

Dsn: JJS
Drw: JJS
Chk: JRL
Rvw: JRL

Sht PP02 of 3

Print Date: 02/19/2015 | Created: 12/29/14 | Proj. # 5263

Copyright © 2013 Bingham Engineering, Inc. Drawing not to be reused in part or in whole without written permission.

C:\5101\5101 Proj\dwg\5263\5263 SILVERTREE PLPF.dwg Bingham Engineering

NOTES:

1. SHUT OFF EXISTING WATER LATERALS AT MAIN. REMOVE CORP STOP AND INSTALL A ROMAC CL1 FULL CIRCLE REPAIR CLAMP OR EQUIVALENT AROUND THE MAIN LINE. REMOVE LATERAL, BACKFILL AND COMPACT ALL EXCAVATED MATERIAL.

2. CAP EXISTING SEWER LATERALS AT MAIN. INSTALL A CAP OR PLUG PER SDSD REQUIREMENTS. REMOVE LATERAL, BACKFILL AND COMPACT ALL EXCAVATED MATERIAL.

3. REMOVE AND CAP EXISTING DUAL LATERALS ON EXISTING MAIN. REMOVE THE EXISTING LATERAL FROM THE SADDLE AND INSTALL A BRASS PLUG IN THE SADDLE PER NSL REQUIREMENTS.

4. CAP EXISTING LAND DRAIN LATERALS AND PATCH EXISTING STORM DRAIN MAIN. REMOVE LATERAL, BACKFILL AND COMPACT ALL EXCAVATED MATERIAL.

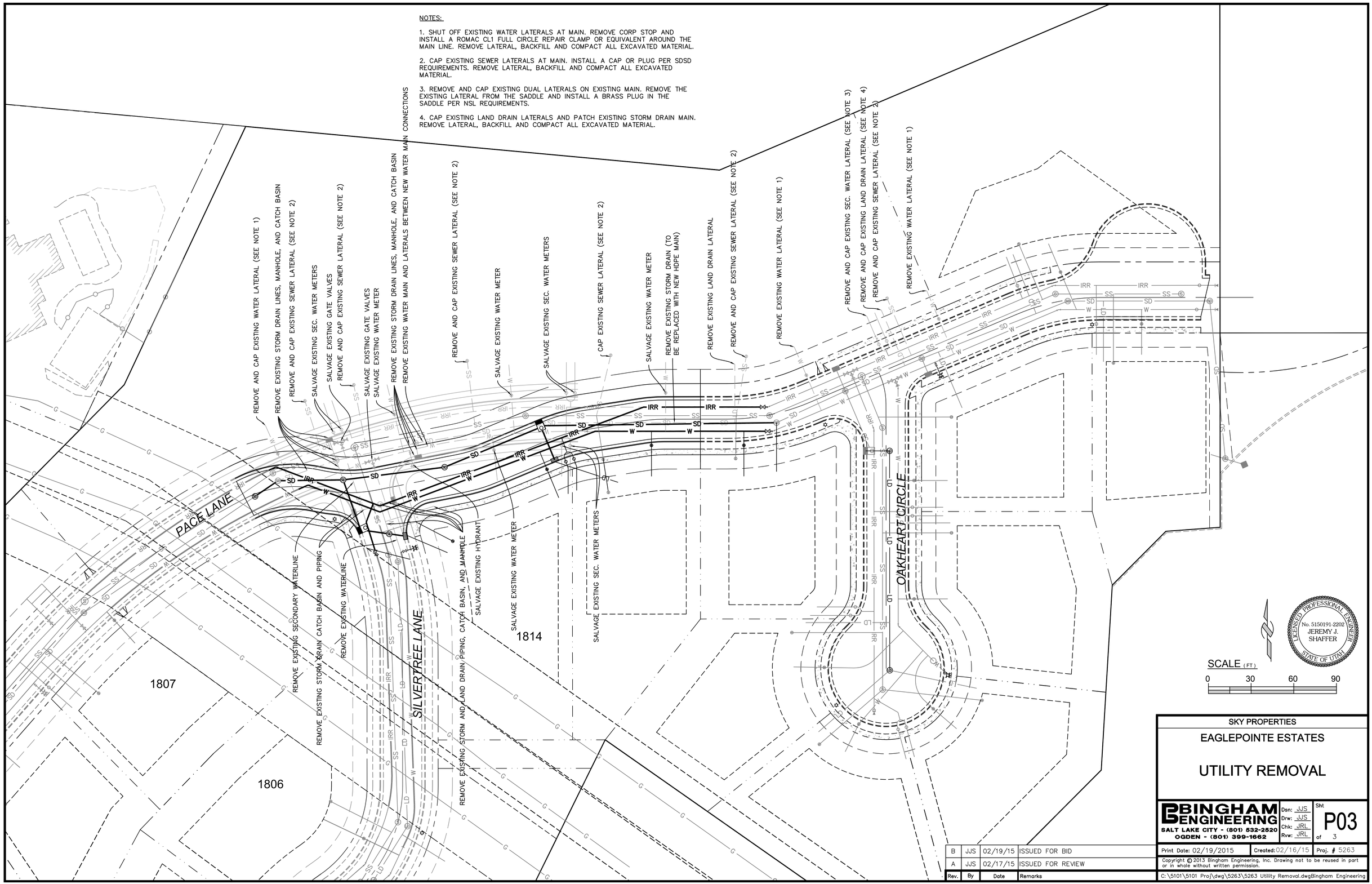

SKY PROPERTIES

EAGLEPOINTE ESTATES

UTILITY REMOVAL

BINGHAM ENGINEERING
SALT LAKE CITY - (801) 532-2520
OGDEN - (801) 399-1662

Dsn: JJS
Drw: JJS
Chk: JRL
Rvw: JRL

Sht P03 of 3

Rev.	By	Date	Remarks
B	JJS	02/19/15	ISSUED FOR BID
A	JJS	02/17/15	ISSUED FOR REVIEW

Print Date: 02/19/2015 | Created: 02/16/15 | Proj. # 5263

Copyright © 2013 Bingham Engineering, Inc. Drawing not to be reused in part or in whole without written permission.

C:\5101\5101 Proj\dwg\5263\5263 Utility Removal.dwgBingham Engineering

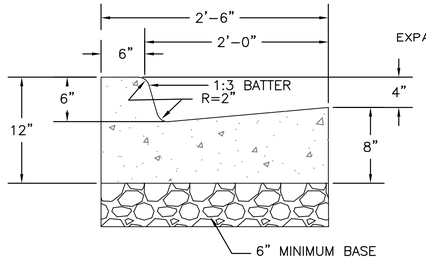

A — TYPICAL 30" HIGHBACK CURB & GUTTER SECTION

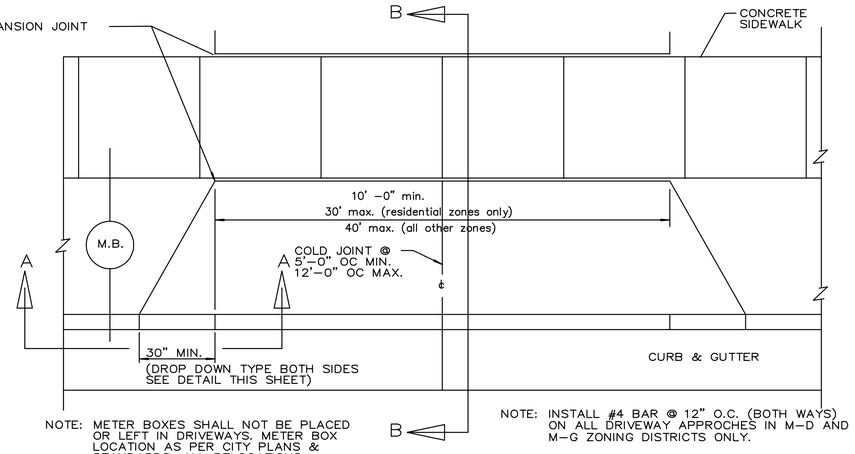

NOTE: METER BOXES SHALL NOT BE PLACED OR LEFT IN DRIVEWAYS. METER BOX LOCATION AS PER CITY PLANS & STANDARDS. ALL RELOCATIONS AT PROPERTY OWNER'S EXPENSE.

NOTE: INSTALL #4 BAR @ 12" O.C. (BOTH WAYS) ON ALL DRIVEWAY APPROCHES IN M-D AND M-G ZONING DISTRICTS ONLY.

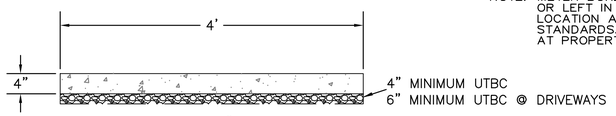

NOTE: SIDEWALK TO BE 6" THICK AT DRIVEWAY

D — TYPICAL SIDEWALK SECTION

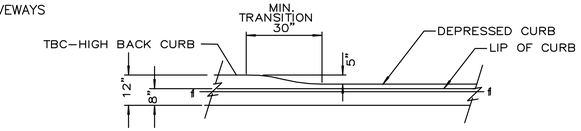

SECTION A-A

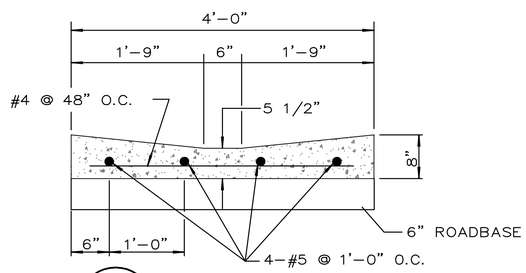

E — CONCRETE WATERWAY

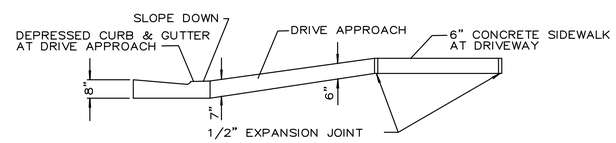

SECTION B-B

B — TYPICAL DRIVEWAY, SIDEWALK & 30" HIGH BACK CURB & GUTTER PLAN

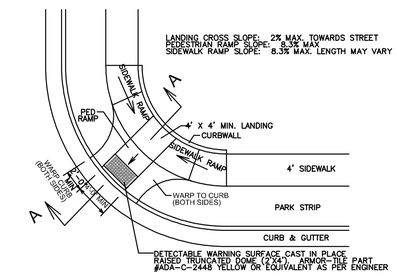

TYPE 1 PEDESTRIAN RAMP

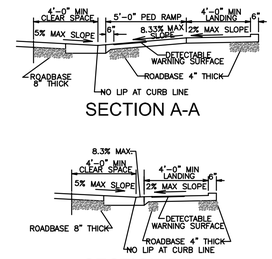

SECTION A-A

SECTION B-B

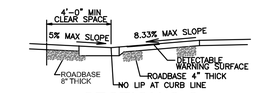

SECTION C-C

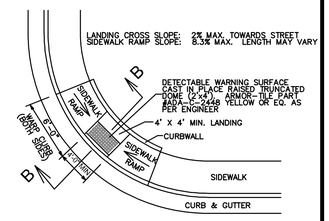

TYPE 1A PEDESTRIAN RAMP

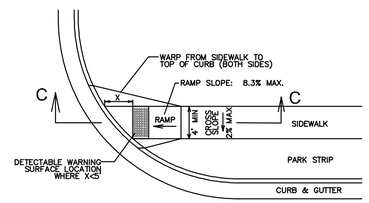

TYPE 2 PEDESTRIAN RAMP

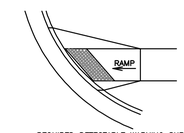

REQUIRED DETECTABLE WARNING SURFACE LOCATION WHERE X > 5' FOR TYPE 2 & 2A

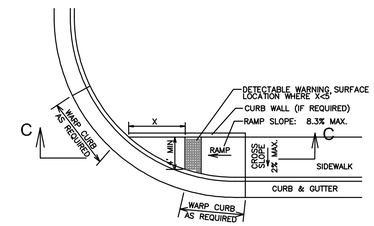

TYPE 2A PEDESTRIAN RAMP

C — TYPICAL HANDICAP RAMP

GENERAL NOTES:

1. A MINIMUM 6" DEPTH OF ROADBASE MATERIAL SHALL BE PLACED TO GRADE AND COMPACTED TO 95% OF MAXIMUM DENSITY, UNDER TBC DRIVEWAY, WATERWAY, AND SIDEWALK ADJACENT TO DRIVEWAY, PRIOR TO PLACEMENT OF CONCRETE.
2. A MINIMUM 4" DEPTH OF ROADBASE MATERIAL SHALL BE PLACED TO GRADE AND COMPACTED TO 95% OF MAXIMUM DENSITY UNDER SIDEWALK PRIOR TO PLACEMENT OF CONCRETE.
3. WHERE CONSTRUCTION IS ADJACENT TO STATE HIGHWAY FRONTAGE, STATE HIGHWAY DEPARTMENT REQUIREMENTS SHALL GOVERN.
4. CONCRETE SHALL BE 3/4-INCH MAXIMUM AGGREGRATE, 6.3 BAGS PER YARD OF TYPE 2 L.A. CEMENT, MINIMUM COMPRESSIVE STRENGTH 4,000 PSI. 6+/-% ENTRAINED AIR.
5. EXPANSION JOINTS FOR CURB & GUTTER SHALL BE SPACED NOT MORE THAN EVERY 50 FT. AND FOR SIDEWALK, NOT MORE THAN EVERY 50 FT. EXPANSION JOINTS SHALL BE OF APPROVED MATERIAL. CONCENTRATION JOINTS SHALL BE SPACED EVERY 10' IN CURB & GUTTER AND NO MORE THAN 4' IN SIDEWALK.
6. ALL WORK SHALL BE IN COMPLIANCE WITH NORTH SALT LAKE STANDARDS. IN THE EVENT OF A CONFLICT BETWEEN DETAILS IN THIS PLAN SET AND NORTH SALT LAKE STANDARDS, THE NORTH SALT LAKE STANDARDS SHALL APPLY.

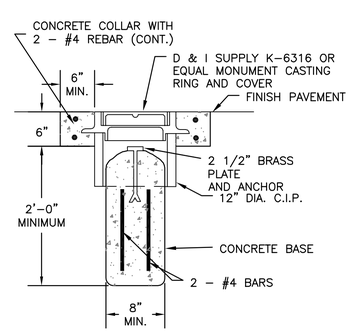

J — SURVEY MONUMENT SECTION

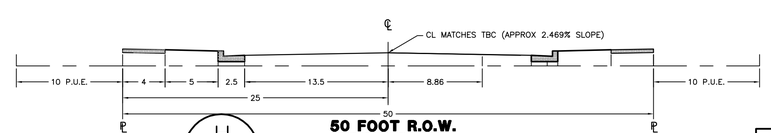

50 FOOT R.O.W.
RESIDENTIAL NEIGHBORHOODS

NOTE: 27' OF ASPHALT IS THE NORTH SALT LAKE CITY MINIMUM

H

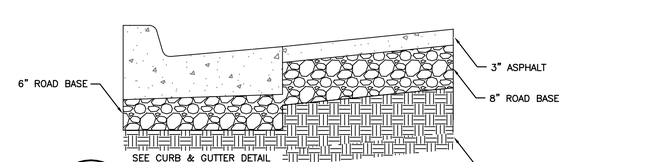

I — **TYPICAL PAVEMENT SECTION A RESIDENTIAL STREETS**

LICENSED PROFESSIONAL ENGINEER No. 5101101-2202 JEREMY J. SHAFFER 9/30/13 STATE OF UTAH

Rev.	By	Date	Remarks
0	JJS	09/30/13	ISSUED FOR CONSTRUCTION
C	JJS	07/11/13	CITY REVIEW
B	JJS	07/02/13	CITY REVIEW
A	JJS	06/13/13	CITY REVIEW

SKY PROPERTIES

EAGLEPOINTE

ROAD DETAILS

BINGHAM ENGINEERING
SALT LAKE CITY - (801) 532-2520
OGDEN - (801) 399-1662

Dsn: JRL
Drw: STAF
Chk: JRL
Rvw: JRL

Sht D1 of

Print Date: 02/17/2015 | Created: 10/18/12 | Proj. # 5101

Copyright © 2013 Bingham Engineering, Inc. Drawing not to be reused in part or in whole without written permission.

C:\5101\5101 Proj\dwg\Details\5101 DET1-8 rev 1.dwg Bingham Engineering

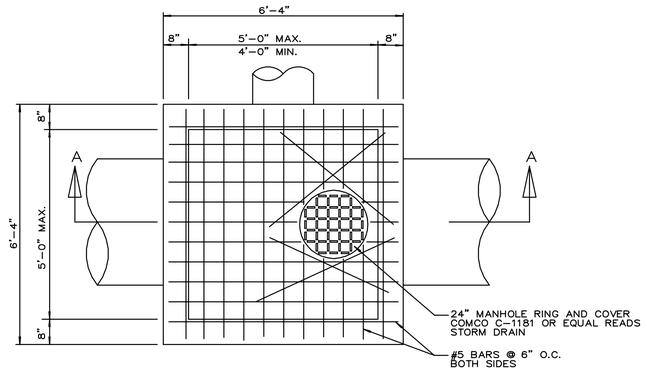

PLAN

NOTE: COVER ALL STORM DRAINS 1'-0" MIN. DESIGN VOLOCITY OF 2'/ SEC.

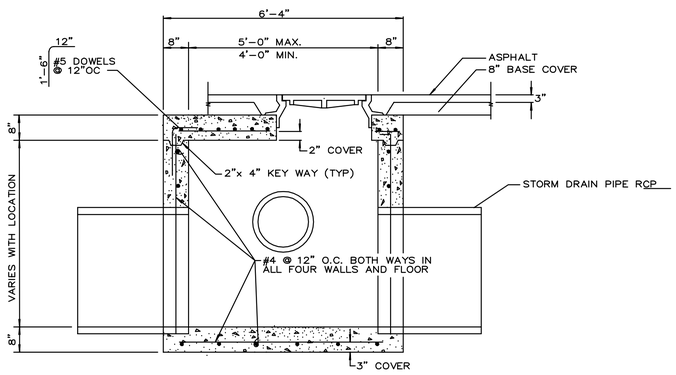

SECTION A–A

A STORM DRAIN MANHOLE

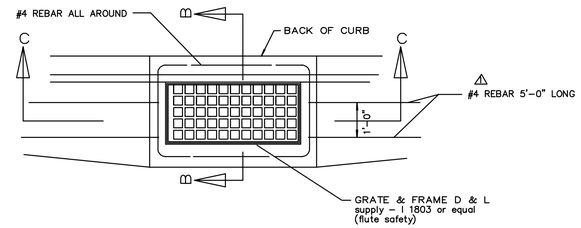

PLAN

INLET BOX – TYPE I SINGLE

SCALE 3/8" = 1'-0"

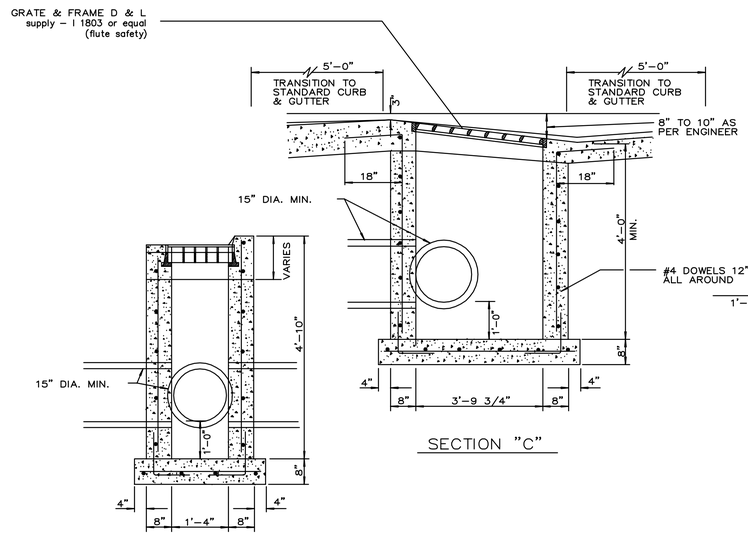

SECTION "C"

SECTION "B"

TYPICAL INLET BOX IN SLOPED STREET

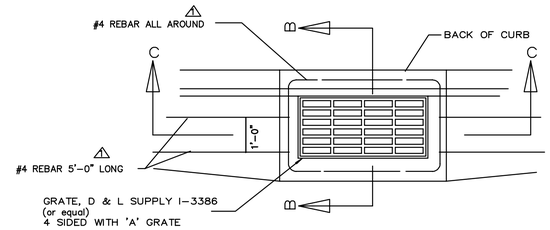

INLET BOX – TYPE II SINGLE

SCALE 3/8" = 1'-0"

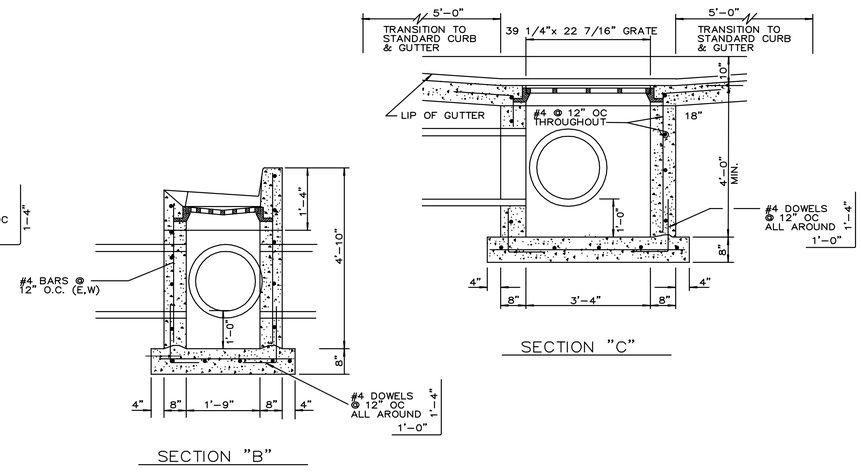

SECTION "C"

SECTION "B"

TYPICAL INLET BOX IN LOW AREA OF STREET

B CATCH BASIN

NOTES:

1. USE 1–1/2" MIN. CLEARANCE FOR REINFORCING STEEL FROM THE FACE OF THE CONCRETE UNLESS OTHERWISE SHOWN.
2. FINISH ALL MANHOLE INVERTS WITH A STEEL TROWEL.
3. STATIONS ON MANHOLES SHOWN ON PLAN APPLY TO THE SHAFT CENTER. ELEVATIONS ARE SHOWN AT THE SHAFT
4. CENTER AND REFER TO THE PROLONGED INVERT GRADE.
5. PRECAST UNITS SHALL BE APPROVED BY NORTH SALT LAKE PUBLIC WORKS.

STORM DRAINAGE / GRADING NOTES

1. All drainage improvements shall be constructed to the requirements and standards of North Salt Lake Public Works and Engineering Departments.

2. All curb and gutter is designed at 0.4% unless noted otherwise. The minimum allowed by North Salt Lake is 0.3%.

3. Maximum spacing of curb inlet boxes is 850 feet.

4. A minimum cross slope of 2.47% was assumed for all pavement, to facilitate drainage to the gutters.

LICENSED PROFESSIONAL ENGINEER
No. 5101191-2202
JEREMY J. SHAFFER
9/30/13
STATE OF UTAH

Rev.	By	Date	Remarks
0	JJS	09/30/13	ISSUED FOR CONSTRUCTION
C	JJS	07/11/13	CITY REVIEW
B	JJS	07/02/13	CITY REVIEW
A	JJS	06/13/13	CITY REVIEW

SKY PROPERTIES

EAGLEPOINTE

STORM DRAINAGE DETAILS

BINGHAM ENGINEERING
SALT LAKE CITY - (801) 532-2520
OGDEN - (801) 399-1662

Dsn: JRL
Drw: STAF
Chk: JRL
Rvw: JRL

Sht D2 of

Print Date: 02/17/2015 | Created: 10/18/12 | Proj. # 5101

Copyright © 2013 Bingham Engineering, Inc. Drawing not to be reused in part or in whole without written permission.

C:\5101\5101 Proj\dwg\Details\5101 DET1–8 rev 1.dwg Bingham Engineering

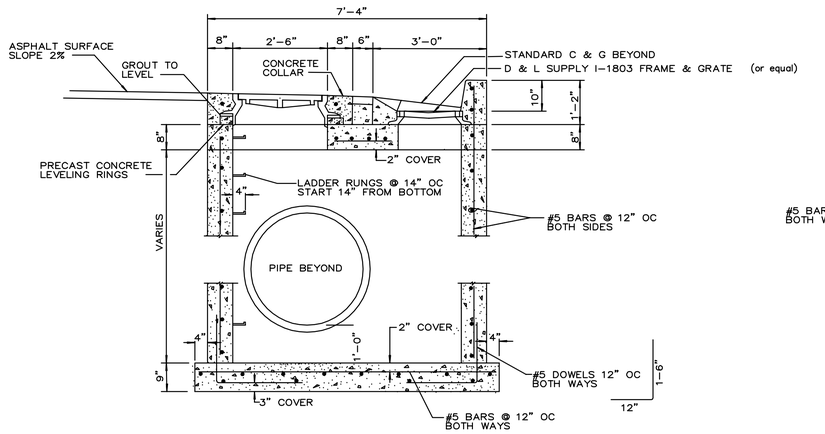

SECTION "A"

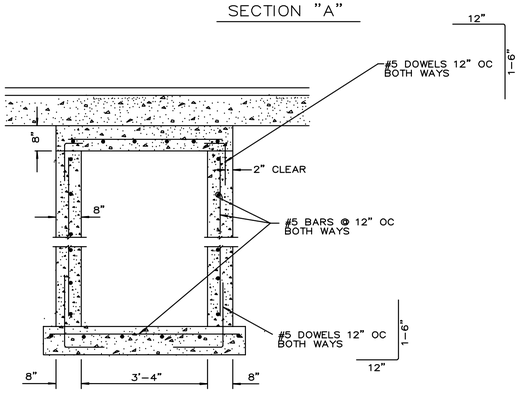

SECTION "B"

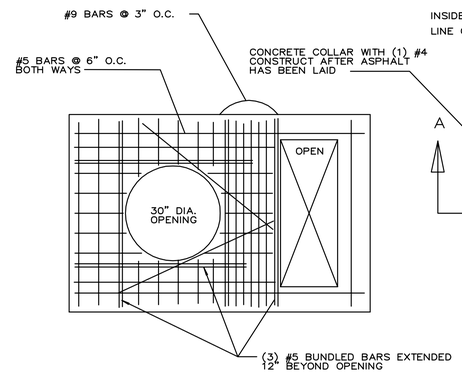

TOP SLAB REINFORCEMENT

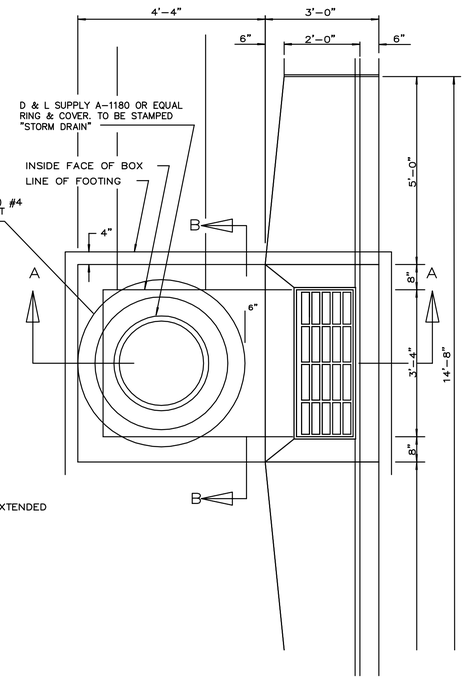

COMBINATION CLEANOUT-INLET BOX

COMBINATION BOX NOTES:

1. MATERIALS, CONSTRUCTION AND WORKMANSHIP SHALL BE IN ACCORDANCE WITH CURRENT EDITION OF STATE OF UTAH STANDARD SPECIFICATIONS FOR ROAD AND BRIDGE CONSTRUCTION, ADDENDUMS AND SPECIAL PROVISIONS THERETO AND AS DIRECTED BY THE CITY ENGINEERS OR THEIR AUTHORIZED REPRESENTATIVE.
2. ALL REINFORCING STEEL SHALL BE INTERMEDIATE GRADE 40 AND SHALL HAVE A MINIMUM 2" COVER OR CLEARANCE FROM ALL SURFACES AND OPENINGS, UNLESS OTHERWISE SPECIFIED.
3. IT SHALL BE THE CONTRACTOR'S OPTION TO CUT STEEL IN THE FIELD.
4. ALL CONCRETE SHALL BE CLASS 4000, UNLESS OTHERWISE SPECIFIED.
5. FLOW-LINE ELEVATIONS, PIPE SIZES AND LOCATIONS SHALL BE SHOWN ON OTHER DRAWINGS.
6. THIS BOX IS DESIGNED TO ACCOMMODATE A 6'-8" O.D. PIPE SIZE (MAXIMUM).
7. PRECAST CONCRETE LEVELING COLLAR AVAILABLE IN 4", 6" OR 8" THICKNESS. GROUT UNDER MANHOLE COVER FRAME AS REQUIRED TO LEVEL.
8. FORMING FOR BOTH SIDES OF WALLS IS REQUIRED.
9. IF DEPTH OF BOX FROM FINISHED GRADE TO INVERT ELEVATION DOES NOT EXCEED 6'-0", USE SINGLE MAT OF REINFORCING; FOR 6' TO 12', USE DOUBLE MAT. FOR BOXES EXCEEDING 12', CONSULT WITH COUNTY ENGINEER OR HIS AUTHORIZED REPRESENTATIVE.
10. DEPTH OF THE EXTENSION INLET TO BE AS DIRECTED BY THE CITY ENGINEER OR HIS AUTHORIZED REPRESENTATIVE. MAXIMUM STANDARD IS 18".
11. FOR STANDARD MANHOLE, USE D&L SUPPLY MODEL A-1180 OR EQUIVALENT. FOR STANDARD BICYCLE-SAFE FRAME AND GRATE, USE D&L SUPPLY MODEL I-1803 FOR SLOPED STREETS, MODEL I-3386 FOR LOW POINTS, OR EQUIVALENT. FOR STANDARD LADDER RUNGS, USE M.A. INDUSTRIES, INC. COPOLYMER PROPYLENE PLASTIC STEPS OR EQUIVALENT.
12. REBAR SPLICE TO BE NOT LESS THAN 30 DIAMETERS.

A — COMBINATION BOX
NTS

LICENSED PROFESSIONAL ENGINEER
No. 5101191-2202
JEREMY J. SHAFFER
9/30/13
STATE OF UTAH

Rev.	By	Date	Remarks
0	JJS	09/30/13	ISSUED FOR CONSTRUCTION
C	JJS	07/11/13	CITY REVIEW
B	JJS	07/02/13	CITY REVIEW
A	JJS	06/13/13	CITY REVIEW

SKY PROPERTIES

EAGLEPOINTE

STORM DRAINAGE DETAILS

BINGHAM ENGINEERING
SALT LAKE CITY - (801) 532-2520
OGDEN - (801) 399-1662

Dsn: JRL
Drw: CBL
Chk: JRL
Rvw: JRL

Sht D3 of

Print Date: 02/17/2015 | Created: 10/18/12 | Proj. # 4333

Copyright © 2013 Bingham Engineering, Inc. Drawing not to be reused in part or in whole without written permission.

C:\5101\5101 Proj\dwg\Details\5101 DET1-8 rev 1.dwg Bingham Engineering

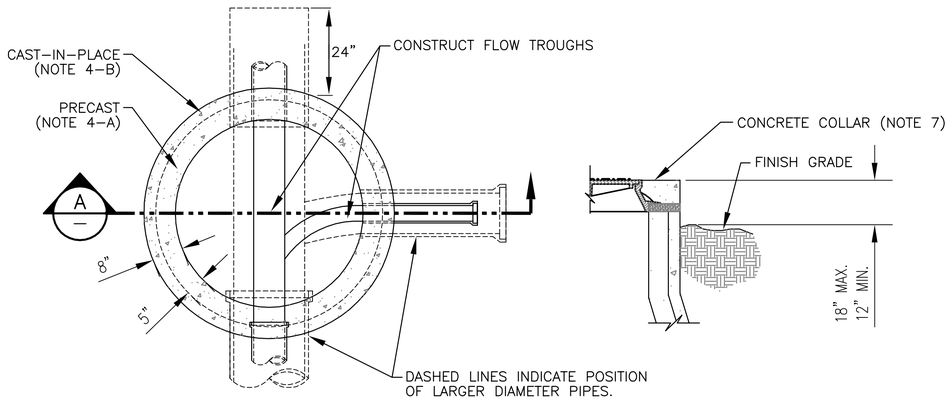

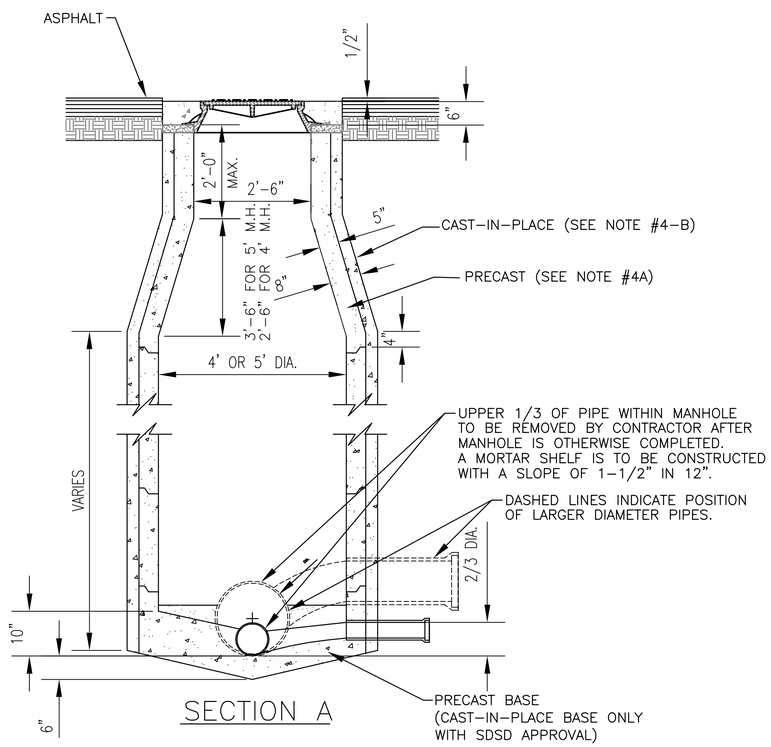

A
—
MANHOLE DETAIL

MANHOLE NOTES

1. FOR SEWERS UNDER 15" DIA. BUILD A 4' DIA. MANHOLE, FOR SEWERS 15" AND LARGER, BUILD A 5' DIA. MANHOLE.
2. GROUT AROUND ALL PIPE OPENINGS WITH 1:2 CONCRETE MORTAR.
3. PLACE FLEXIBLE GASKET-TYPE SEALANT IN ALL MANHOLE JOINTS.
4. ALTERNATES FOR UPPER SECTION OF MANHOLE:
   A-PRECAST REINFORCED CONCRETE WALLS 5" THICK, (TO BE APPROVED BY THE ENGINEER).
   B-CAST-IN-PLACE CONCRETE, 8" MIN. WALL THICKNESS.
5. INVERT COVERS SHALL BE PLACED OVER THE TOP OF PIPE IN ALL MANHOLES DURING CONSTRUCTION. 5/8" EXTERIOR PLYWOOD SHALL BE USED. SEE STANDARD PLAN NO. SS-3.
6. INSTALL ROMAG STYLE "LCT" MANHOLE ADAPTER GASKET WHEN CONNECTING PLASTIC PIPES TO MANHOLES.
7. IN STREETS, ROADWAYS & OTHER PAVED AREAS, CONSTRUCT CAST-IN-PLACE RISER/COLLAR WITH THERMOPLASTIC FORM BY WHIRLYGIG. IN UNIMPROVED AREAS, USE STEEL RISERS TO MATCH GRADE.
8. INSTALL 2' STABILIZATION MATERIAL UNDER PRECAST BASES
9. ONLY ONE INSIDE DROP ALLOWED PER MANHOLE.
10. MATCH THE 0.8 DIAMETER POINTS OF THE PIPES.
11. IF THE DROP IS MORE THAN 18", THE RISER SHALL BE ANCHORED TO THE WALL EVERY 12". ANCHORS SHALL BE STAINLESS STEEL AND SHALL BE APPROVED PRIOR TO USE.
12. ALL STUBS FROM MANHOLES FOR FUTURE EXTENSIONS SHALL CONSIST OF 2' STUBS OF PLAIN END PIPE, WITH THAT PIPE TO BE REMOVED AND REPLACED WITH A FULL LENGTH PIPE AT THE TIME THE LINE IS EXTENDED. INSTALL PLUGS IN ALL FUTURE STUBS.

SEWER NOTES

1. All sewer installation shall conform to the requirements of the South Davis Sewer District (SDSD). Contact the Distict to arrange for inspection of all work. They can be reached at 295-3469.

2. All sewer mains shall be SDR 35 polyvinyl chloride (PVC) pipe meeting the requirements of ASTM D3034. The pipes shall have integral bells with rubber gaskets. The rubber gaskets shall conform to ASTM F477.

3. Install all pipe to the line and grade shown on the construction drawings. All sewer grades shall be verified at each manhole, and any discrepancies corrected before the next section of piping is installed.

4. All pipe shall be installed on a foundation consisting of a minimum of one-foot of sewer rock placed over undisturbed native material. Pipe zone material shall be placed to a level one-foot above the pipe.

5. All manholes shall be of the size and dimensions shown on the drawings. All manhole joints shall be gasketed or sealed to prevent the inflow of groundwater. All manholes shall be tested after installation. The cone section of the manhole shall be installed to within 1' of design finish grade. Bring manhole to asphalt grade by constructing cast-in-place riser/collar with thermoplastic form by Whirlygig.

6. Laterals shall be placed at each lot as shown on the construction drawings. The lateral is to be installed at 2% grade, and shall extend into the lot a minimum of 20 feet. Mark the end of all laterals with a 2" x 4" marker post that extends from the lateral to a minimum of 2 feet above the existing ground elevation. Place a water tight plug in the end of each lateral. All lateral locations shall be accurately recorded on a set of drawings, providing a distance from the nearest manhole, and a distance from a lot line. These record drawings shall be submitted to the Owner prior to final payment for sewer work.

7. Any dewatering costs shall be included in the unit prices submitted to the Owner.

8. Material excavated from the sewer trenches shall be placed at locations directed by the Owner or his representative. Excavated material shall be placed in thin lifts to facilitate drying.

9. All trenches shall be backfilled with select granular materials meeting the gradation shown on the construction drawings. All backfill shall be placed in lifts not exceeding 9", and compacted to a minimum of 95% of maximum density as determined by ASTM D1557.

10. Test all main lines and manholes per SDSD requirements. Report all testing information to both SDSD and Owner.

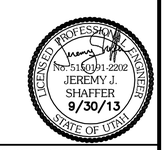

Rev.	By	Date	Remarks
0	JJS	09/30/13	ISSUED FOR CONSTRUCTION
C	JJS	07/11/13	CITY REVIEW
B	JJS	07/02/13	CITY REVIEW
A	JJS	06/13/13	SEWER/CITY REVIEW

SKY PROPERTIES

EAGLEPOINTE

SANITARY SEWER DETAILS

BINGHAM ENGINEERING
SALT LAKE CITY - (801) 532-2520
OGDEN - (801) 399-1662

Dsn: JRL
Drw: STAF
Chk: JRL
Rvw: JRL

Sht D4 of

Print Date: 02/17/2015 | Created: 10/18/12 | Proj. # 5101

Copyright © 2013 Bingham Engineering, Inc. Drawing not to be reused in part or in whole without written permission.

C:\5101\5101 Proj\dwg\Details\5101 DET1-8 rev 1.dwg Bingham Engineering

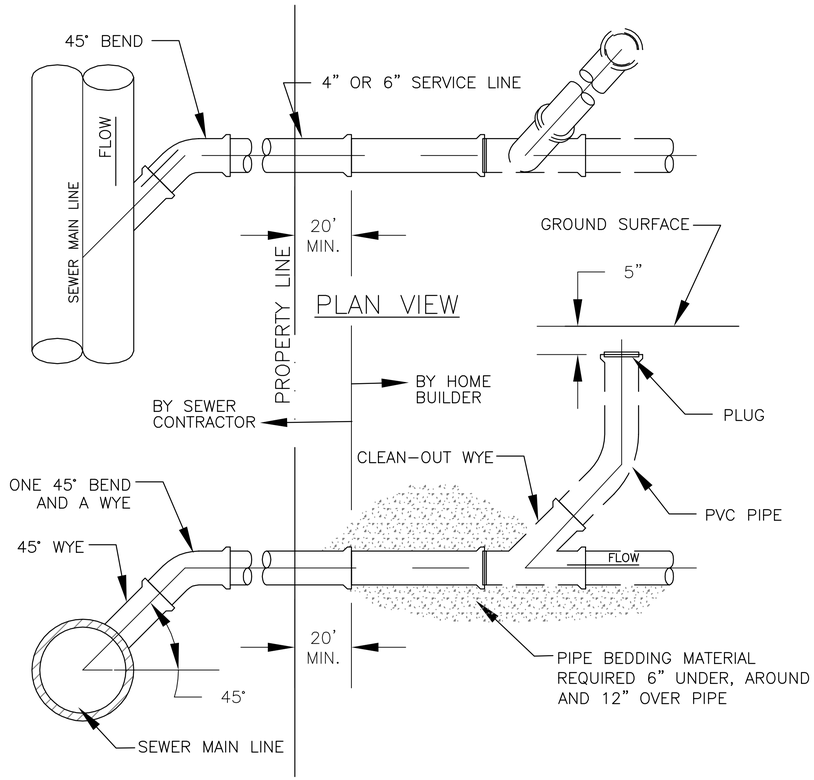

NOTES:

1. ALL SERVICES SHALL BE 4" DIA. MINIMUM, UNLESS DIRECTED OTHERWISE AND SHALL BE EXTENDED FROM MAIN LINES TO 20' INSIDE OF PROPERTY LINES.

2. MINIMUM GRADE SHALL BE 1% FOR 6" SERVICE LINES AND 2% FOR 4" SERVICE LINE MINIMUM GRADE OF 1% CAN BE USED FOR 4" SERVICE LINES WHERE REQUIRED AND AS APPROVED BY THE DISTRICT.

3. CLEAN-OUTS SHALL BE INSTALLED EVERY 100 FEET, AND AT ALL CHANGES IN DIRECTION OR GRADE.

4. ALL 90° CONNECTIONS TO MAIN MUST BE CONSTRUCTED WITH ONE 45° BEND AND A WYE.

5. DIRECT NOSE-ON CONNECTIONS ARE USED WHEN CONNECTING TO EXISTING MAIN LINE. ALL NOSE-ON WORK IS TO BE DONE BY DISTRICT PERSONNEL.

6. NO BENDS ARE ALLOWED BETWEEN MAIN LINE AND THE END OF LATERAL 20' BEYOND PROPERTY LINE.

7. A 2' MINIMUM LENGTH OF STRAIGHT PIPE SHALL BE INSTALLED BETWEEN ANY TWO BENDS.

8. OPPOSING LATERALS REQUIRE COMBINATION WYE.

A / — STANDARD SEWER SERVICE CONNECTION AND CLEANOUT

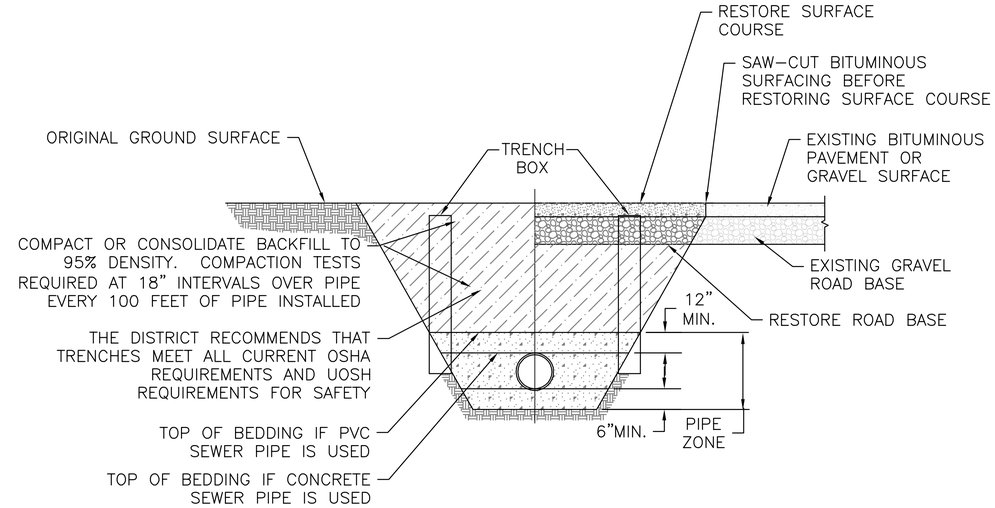

RECOMMENDED TRENCH QUANTITIES

PIPE DIAMETER INCHES	PIPE DIAMETER mm	RECOMMENDED MAXIMUM TRENCH WIDTH FOR FILL IN PIPE ZONE INCHES	RECOMMENDED MAXIMUM TRENCH WIDTH FOR FILL IN PIPE ZONE mm	RECOMMENDED MAXIMUM WIDTH FOR FILL & SURFACING ABOVE PIPE ZONE MEASURED AT TOP OF TRENCH CENTERED ON PIPE INCHES	RECOMMENDED MAXIMUM WIDTH FOR FILL & SURFACING ABOVE PIPE ZONE MEASURED AT TOP OF TRENCH CENTERED ON PIPE mm
4	101.6	72	1828.8	96	2438.4
6	152.4	72	1828.8	96	2438.4
8	203.2	72	1828.8	96	2438.4
10	254.0	72	1828.8	96	2438.4
12	304.8	72	1828.8	96	2438.4
15	381.0	72	1828.8	96	2438.4
18	457.2	72	1828.8	96	2438.4
21	533.4	72	1828.8	96	2438.4
24	609.6	72	1828.8	96	2438.4
30	762.0	84	2133.6	108	2743.2
36	914.4	84	2133.6	108	2743.2
42	1066.8	96	2438.4	120	3048.0
48	1219.2	96	2438.4	120	3048.0
54	1371.6	108	2743.2	132	3352.8
60	1524.0	120	3048.0	144	3657.6

NOTES:

1. THE DISTRICT RECOMMENDS CONTRACTOR MEET ALL OF THE REQUIREMENTS ESTABLISHED FOR SAFE TRENCHING. (SEE OSHA AND UOSH REQUIREMENTS, LATEST EDITIONS).

2. CONTRACTOR SHALL LOCATE ALL UNDERGROUND UTILITIES BEFORE LAYING PIPE WITHIN 50' OF SAID UTILITIES WHICH MAY BE EXPOSED, DAMAGED OR CROSSED AS SHOWN ON THE DRAWINGS OR AS "BLUE STAKED". THE CONTRACTOR WILL MAKE ARRANGEMENTS WITH THE UTILITY COMPANY TO MOVE THE UTILITY IF NECESSARY OR OBTAIN PERMISSION FROM THE DISTRICT ENGINEER TO MODIFY GRADE OF PIPELINE IN ORDER TO GO AROUND UTILITIES.

3. TESTING: ALL NEW SANITARY SEWERS TO BE "TELEVISED" AND NECESSARY REPAIRS MADE BEFORE ACCEPTANCE. ALL LINES SHALL BE PRESSURE TESTED TO 3.5 psi MIN. FOR 5 MINUTES. A MANDREL OR BALL CAN BE USED TO VERIFY DEFORMATION OF A PIPE AS DETERMINED FROM THE VIDEO UNLESS SPECIFIED OTHERWISE.

4. ALL SEWER LINES TO BE INSTALLED IN PUBLIC RIGHT-OF-WAY OR RECORDED SEWER EASEMENT UNLESS OTHERWISE APPROVED BY SOUTH DAVIS SEWER DISTRICT.

B / — STANDARD SEWER TRENCH DETAIL

LICENSED PROFESSIONAL ENGINEER No. 5100317-2202 JEREMY J. SHAFFER 9/30/13 STATE OF UTAH

Rev.	By	Date	Remarks
O	JJS	09/30/13	ISSUED FOR CONSTRUCTION
C	JJS	07/11/13	CITY REVIEW
B	JJS	07/02/13	CITY REVIEW
A	JJS	06/13/13	SEWER/CITY REVIEW

SKY PROPERTIES

EAGLEPOINTE

SANITARY SEWER DETAILS

BINGHAM ENGINEERING
SALT LAKE CITY - (801) 532-2520
OGDEN - (801) 399-1662

Dsn: JRL
Drw: STAF
Chk: JRL
Rvw: JRL

Sht D5 of

Print Date: 02/17/2015 | Created: 10/18/12 | Proj. # 5101

Copyright © 2013 Bingham Engineering, Inc. Drawing not to be reused in part or in whole without written permission.

C:\5101\5101 Proj\dwg\Details\5101 DET1-8 rev 1.dwg Bingham Engineering

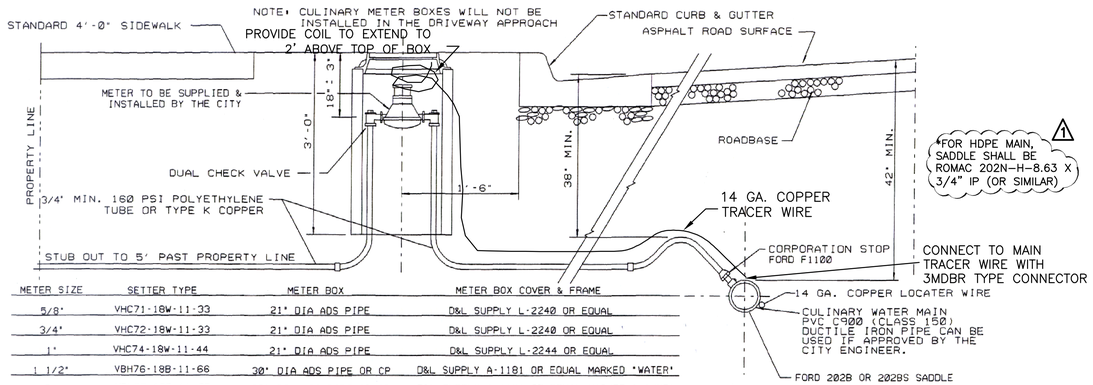

*FOR HDPE MAIN, SADDLE SHALL BE ROMAC 202N-H-8.63 X 3/4" IP (OR SIMILAR)

METER SIZE	SETTER TYPE	METER BOX	METER BOX COVER & FRAME
5/8"	VHC71-18W-11-33	21" DIA ADS PIPE	D&L SUPPLY L-2240 OR EQUAL
3/4"	VHC72-18W-11-33	21" DIA ADS PIPE	D&L SUPPLY L-2240 OR EQUAL
1"	VHC74-18W-11-44	21" DIA ADS PIPE	D&L SUPPLY L-2244 OR EQUAL
1 1/2"	VBH76-18B-11-66	30" DIA ADS PIPE OR CP	D&L SUPPLY A-1181 OR EQUAL MARKED "WATER"
2"	VBH77-18B-11-77	30" DIA ADS PIPE OR CP	D&L SUPPLY A-1181 OR EQUAL MARKED "WATER"
3" OR MORE	SEE CITY ENGINEER	SEE CITY ENGINEER	SEE CITY ENGINEER

TYPICAL WATER CONNECTION

A — TYPICAL LATERAL CONNECTION

N.T.S.

NOTES:

1. WATER MAIN LINES SHALL BE CONSTRUCTED WITH A MINIMUM COVER OF 42".
2. ALL MECHANICAL JOINT FITTINGS SHALL BE TORQUED BETWEEN 75-90 FT. LBS.
3. ALL BEVELED EDGES SHALL BE CUT OFF BEFORE BEING CONNECTED TO A MECHANICAL JOINT FITTING.
4. ALL METER BOX LIDS SHALL HAVE A 2" DIA. TOUCH AND READ HOLE.
5. ALL POLYETHYLENE LATERALS MUST HAVE AN INSERT STIFFENER AT ALL CONNECTIONS.
6. TRACER WIRE TO BE INSTALLED FOR ALL WATER LINES CONNECTED TO THE SYSTEM OR IN CITY R.O.W.

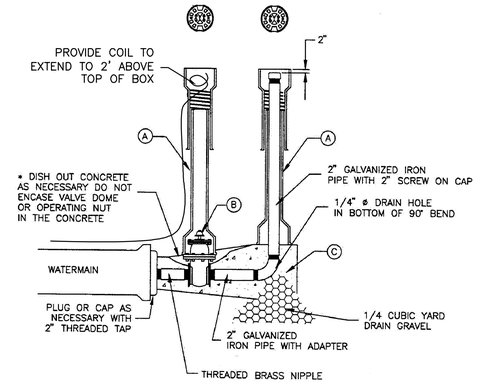

LEGEND		
No.	ITEM	DESCRIPTION
A	VALVE BOX WITH LID	2 PIECE CAST IRON
B	2" GATE VALVE WITH SCREW ENDS	2"x 2" OPERATING NUT
C	CONCRETE THRUST BLOCK	BASED ON

D — 2" WASHOUT VALVE

N.T.S.

WATER MASTER PLAN NOTES

1. All water mains, services, hydrants and appurtenant materials shall be constructed per the requirements of North Salt Lake. Notify North Salt Lake Public Works prior to commencement of any work to allow them to inspect all phases of the work.

2. All culinary water mains shall be manufactured of polyvinyl chloride (PVC), and shall meet the requirements of AWWA C-900. The Dimension Ratio (DR) of the pipe shall be 18. Deflect joints no more than the deflection recommended by the pipe and joint manufacturer. A 14 ga. tracer wire shall be installed along all water mains and individual laterals. The tracer wire shall be connected and brought to 2' above the surface at each valve and meter box.

3. All valves 10" and under shall be gate style valves meeting the requirements of AWWA C-509 (resilient wedge gate valves). All valves 12" and larger shall be butterfly valves meeting the requirements of AWWA C-504. All valves shall be designed for direct bury applications, shall have a 2" square operating nut, and shall be furnished with a two piece, cast iron, slip type valve box, with the lid marked WATER. All valves shall be wrapped in 8-mil polyethylene plastic, and all bolts shall be coated with FM grease. The tracer wire loops shall be brought to the surface at each valve box. Provide a terminal secured to the valve box for the tracer wire. Firmly attach the terminal to the valve box within 6" of the top of the valve box. Provide excess wire to facilitate future adjustments of valve box. Wire and terminal shall not restrict operation of the valve.

4. All fittings shall be cast iron fittings meeting the requirements of AWWA C-110 and C-111, and shall be either flanged or mechanical joint coupled. Install all fittings to manufacturer's recommendations. Coat all bolts with FM Grease, and wrap all fittings with 8-mil polyethylene.

5. Concrete thrust blocks and mechanical restraint devices (mega lug style) shall be used at all valves, fittings and changes in pipe direction. Thrust blocks shall be sized to accommodate the anticipated thrust, and to distribute the thrust to the soil at a pressure acceptable to the soil parameters. See the thrust block details included in the construction drawings, detail 'A', sheet D7.

6. All water mains shall be buried with a minimum cover of 42".

7. All water mains shall be pressure tested to 200% of operating pressure, and maintained for a minimum of 2-hours. All pressure testing shall be in accordance with North Salt Lake procedures. Schedule all testing in advance with North Salt Lake personnel so they can witness the testing.

8. All water mains shall be disinfected with a chlorinated slurry. A residual chlorine concentration of 25 ppm shall exist at the end of the 24-hour contact period. After 24-hour minimum contact period, flush all chlorine from the lines. Do not discharge chlorinated water into natural waterways or storm drains. Collect bacteria samples after all flushing is completed. All chlorine and bacteria testing shall be in accordance with North Salt Lake procedures. Schedule all testing in advance with North Salt Lake personnel so they can collect the samples and perform the testing.

9. All fire hydrants shall be Mueller Centurian, with a 4 ½" pumper nozzle and 2 – 2 ½" hose connections. A guard valve shall be installed with each hydrant. The guard valve shall be located at the tee off of the main. Bury hydrant to proper bury depth indicated on the hydrant. Rotate hydrant so that pumper nozzle faces the street. Provide a gravel sump adjacent to the barrel drain. Wrap barrel and guard valve in 8-mil polyethylene plastic, and all bolts shall be coated with FM grease, see detail this sheet.

9. All service taps shall be made using an all bronze, double-strap service saddle (Ford 202B or approved equal). Provide a corporation stop (Ford F1100 or approved equal), 3/4" CTS PE tubing, requisite fittings (including stainless steel pipe inserts), a Ford VHC72-18W-11-33 meter setter with State approved dual check valves and locking wings, a 21" diameter meter box with cast iron meter box lid and frame. Install 14 ga. copper tracer wire along each lateral per N.S.L. standards. Provide sufficient wire in meter box to reach 2' above the surface. Extend tubing from meter setter to a point at least 10 feet beyond the property line. Bend over end of tubing, and wrap with tape to prevent debris from entering the exposed tubing.

10. Where plans indicate non-typical cross and tee configurations. The intent is to use a cross or tee of the largest diameter shown, with appropriate reducers installed between the fitting and the valve. Use flanged fittings.

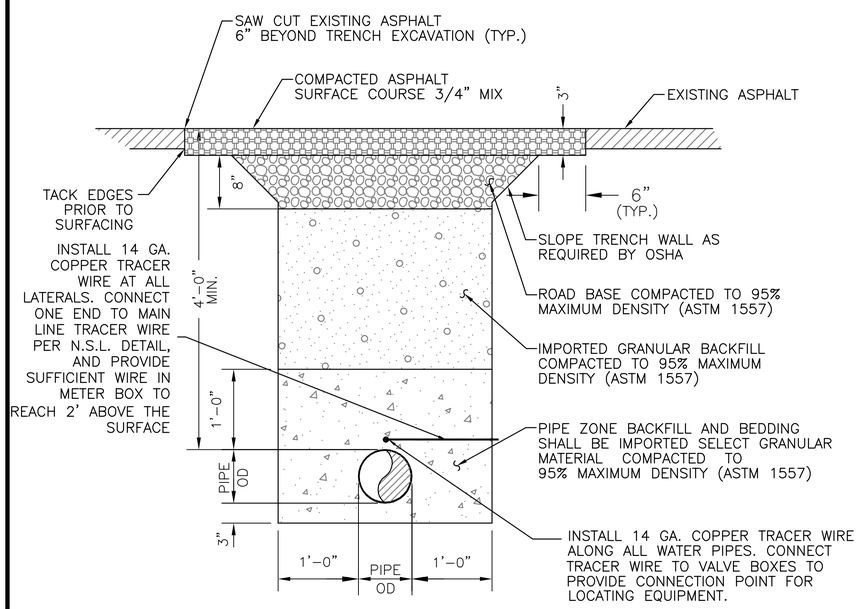

B — TRENCH DETAIL

N.T.S.

C — TYPICAL FIRE HYDRANT CONNECTION

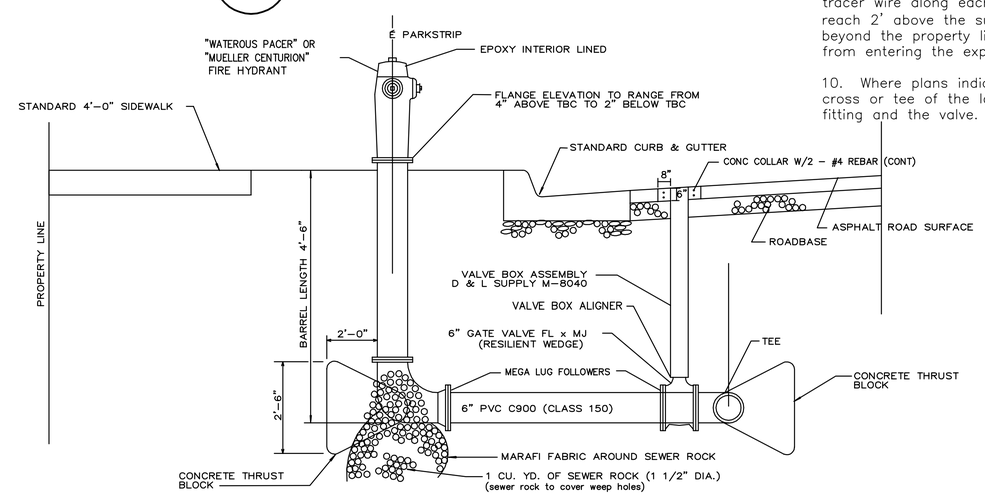

Rev.	By	Date	Remarks
1	JJS	02/17/15	HDPE NOTE
0	JJS	09/30/13	ISSUED FOR CONSTRUCTION
C	JJS	07/11/13	CITY REVIEW
B	JJS	07/02/13	CITY REVIEW

SKY PROPERTIES

EAGLEPOINTE

CULINARY WATER DETAILS

BINGHAM ENGINEERING
SALT LAKE CITY - (801) 532-2520
OGDEN - (801) 399-1662

Dsn: JRL
Drw: STAF
Chk: JRL
Rvw: JRL

Sht D6 of

LICENSED PROFESSIONAL ENGINEER No. 5100391-2202 JEREMY J. SHAFFER 2/17/15 STATE OF UTAH

Print Date: 02/17/2015 | Created: 10/18/12 | Proj. # 5101

Copyright © 2013 Bingham Engineering, Inc. Drawing not to be reused in part or in whole without written permission.

C:\5101\5101 Proj\dwg\Details\5101 DET1-8 rev 1.dwg Bingham Engineering

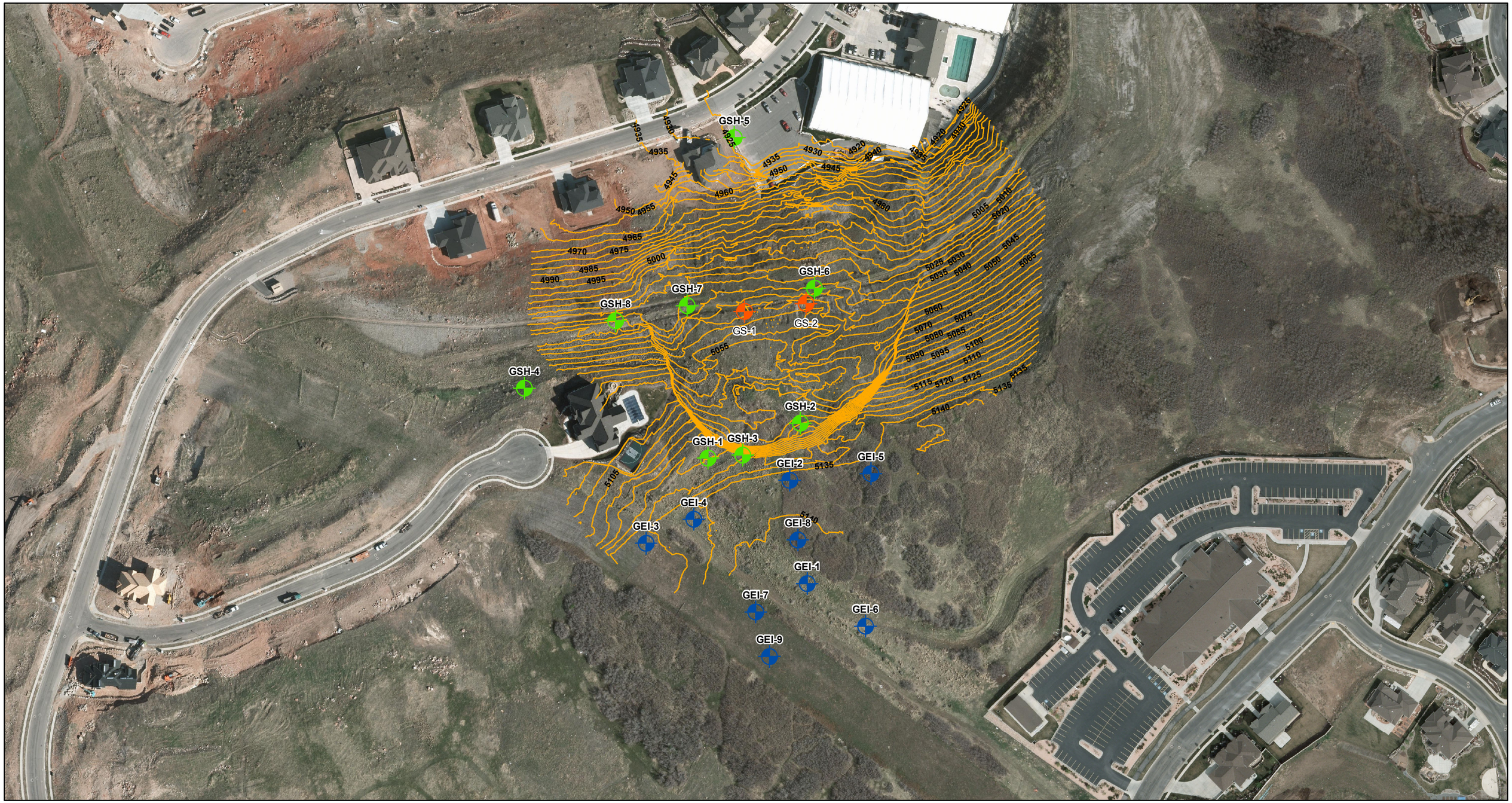

0 50 100 200 300 400 Feet

1:1,800

Base Map: 2011 NAIP 1 Meter Orthophotography
obtained from the State of Utah AGRC

Legend

- GEI Boring Location
- GSH Boring Location
- GeoStrata Boring

N

GeoStrata
Engineering & Geosciences
Copyright GeoStrata, 2014

North Salt Lake Landslide
920-004
North Salt Lake, Utah

Boring Location Map

Plate

DATE	
STARTED:	9/10/14
COMPLETED:	9/10/14
BACKFILLED:	9/10/14

North Salt Lake City
Eagle Pointe Landslide
North Salt Lake, UT
Project Number 920-004

GeoStrata Rep: S. Seal
Rig Type: Sonic

BORING NO: **B-1**
Sheet 1 of 3

LOCATION
NORTHING EASTING ELEVATION

DEPTH METERS	DEPTH FEET	SAMPLES	WATER LEVEL	GRAPHICAL LOG	UNIFIED SOIL CLASSIFICATION	MATERIAL DESCRIPTION	Dry Density(pcf)	Moisture Content %	Percent minus 200	Liquid Limit	Plasticity Index
0	0				GP-GM	Lacustrine Gravel; Poorly Graded GRAVEL with silt and sand - brown, moist, sand is fine to medium grained, gravel is subrounded to rounded, with light red staining					
								1.6	7.7	NP	NP
	10					- sand is medium to coarse grained, gravel is rounded					
						- sand is fine to medium grained, gravel is subrounded to rounded					
								2.4	6.5	NP	NP
	15					- light brown, silt is nonplastic, gravel is subrounded					
								1.6	11.6	NP	NP
	20										
					CL	Residual Bedrock; Lean CLAY with sand - grey, very moist to wet					
	25							15.5	19.3	35	19

Moisture Content and Atterberg Limits

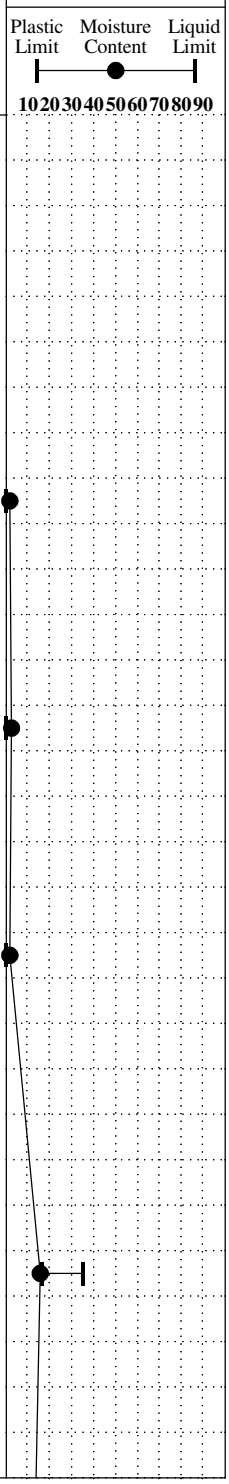

GeoStrata

Copyright (c) 2014, GeoStrata.

SAMPLE TYPE
- GRAB SAMPLE
- 3" O.D. THIN-WALLED HAND SAMPLER

WATER LEVEL
- MEASURED
- ESTIMATED

NOTES:

Plate B-1

DATE	
STARTED:	9/10/14
COMPLETED:	9/10/14
BACKFILLED:	9/10/14

North Salt Lake City
Eagle Pointe Landslide
North Salt Lake, UT
Project Number 920-004

GeoStrata Rep: S. Seal
Rig Type: Sonic

BORING NO: **B-1**
Sheet 2 of 3

LOCATION
NORTHING EASTING ELEVATION

METERS	FEET	UNIFIED SOIL CLASSIFICATION	MATERIAL DESCRIPTION	Dry Density(pcf)	Moisture Content %	Percent minus 200	Liquid Limit	Plasticity Index
	30	GC	Clayey GRAVEL with sand - grey, very moist to wet		12.5	21.4	33	20
10	35	CH	Fat CLAY with sand - grey, moist, with occasional carbonate stringers, weakly cemented		18.4	84.7	57	41
11		SC	Clayey SAND - light grey, higly to completely weathered volcanic tuff		13.9	47.0	47	30
12	40	CL	Sandy Lean CLAY - light grey, moist		11.2	56.7	31	14
13		CH	Sandy Fat CLAY - light grey to brown		18.2	62.1	53	39
14	45		- with sand and trace gravel, red-brown,					
		CH	Fat CLAY with sand - light grey with brown mottling		20.2	81.1	54	37
15	50	CH	Sandy Fat CLAY with gravel - light grey with brown mottling, moist		34.7	51.9	83	45
16		CL	Lean CLAY with sand - red-brown, moist, with thick carbonate stringers		18.3	83.2	40	27
17	55	CL	Sandy Lean CLAY - light grey, moist		16.9	59.7	44	32
18		CH	Fat CLAY with sand - brown, moist		33.4	83.4	77	58

Moisture Content and Atterberg Limits

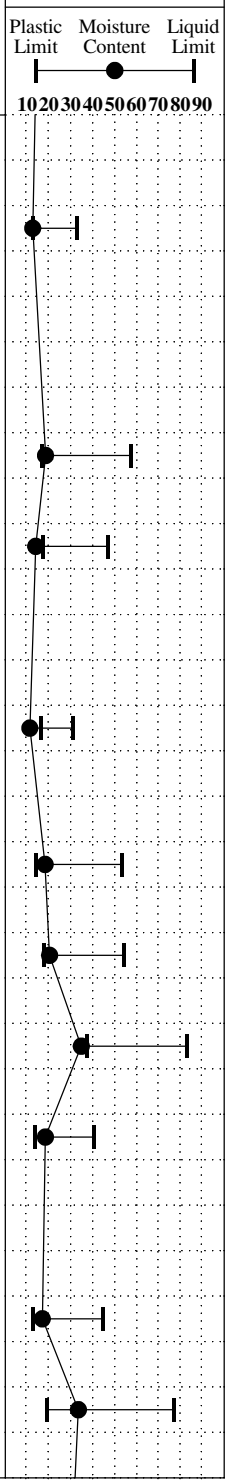

GeoStrata

Copyright (c) 2014, GeoStrata.

SAMPLE TYPE
- GRAB SAMPLE
- 3" O.D. THIN-WALLED HAND SAMPLER

WATER LEVEL
- MEASURED
- ESTIMATED

NOTES:

Plate B-2

DATE	
STARTED:	9/10/14
COMPLETED:	9/10/14
BACKFILLED:	9/10/14

North Salt Lake City
Eagle Pointe Landslide
North Salt Lake, UT
Project Number 920-004

GeoStrata Rep: S. Seal
Rig Type: Sonic

BORING NO: **B-1**
Sheet 3 of 3

LOCATION
NORTHING EASTING ELEVATION

DEPTH METERS	DEPTH FEET	SAMPLES	WATER LEVEL	GRAPHICAL LOG	UNIFIED SOIL CLASSIFICATION	MATERIAL DESCRIPTION	Dry Density(pcf)	Moisture Content %	Percent minus 200	Liquid Limit	Plasticity Index
	60										
19						- with grey-brown mottling			72.8	53	30
20	65					- moist to very moist		26.4	75.5	53	39
					CL	Competent Bedrock - Volcanic Tuff; Sandy Lean CLAY - light brown, moist		6.0	51.8	35	25
21	70										
					CL	Lean CLAY - light brown, moist		15.7	85.9	49	36
22											
23	75										
					CL	Lean CLAY with sand - light brown, moist		9.9	73.3	35	23
					SC	Clayey SAND - light brown, moist		8.4	48.7	34	21
24	80										
25					CL	Sandy Lean CLAY - light brown, moist		8.9	61.3	35	20
26	85							9.2	58.3	44	32
						Bottom of Test Pit @ 86 Feet					
27											

Moisture Content and Atterberg Limits

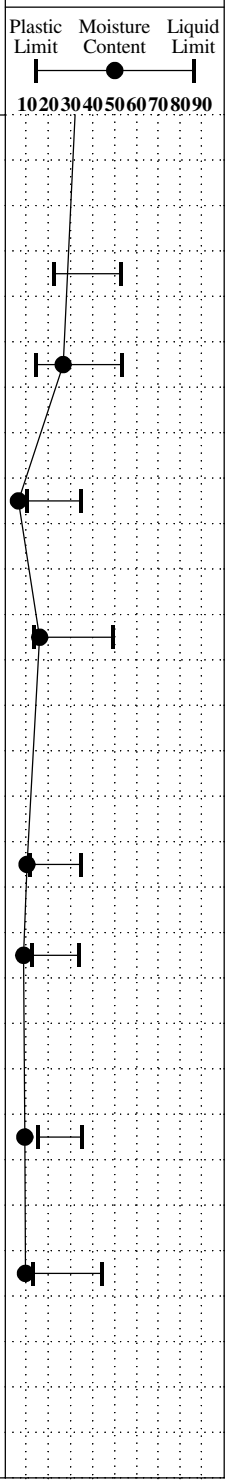

LOG OF BORING (B) - NO BLOW COUNTS BORING LOGS.GPJ GEOSTRATA.GDT 10/22/14

GeoStrata

Copyright (c) 2014, GeoStrata.

SAMPLE TYPE
- GRAB SAMPLE
- 3" O.D. THIN-WALLED HAND SAMPLER

WATER LEVEL
- MEASURED
- ESTIMATED

NOTES:

Plate B-3

DATE	
STARTED:	9/11/14
COMPLETED:	9/11/14
BACKFILLED:	9/11/14

North Salt Lake City
Eagle Pointe Landslide
North Salt Lake, UT
Project Number 920-004

GeoStrata Rep: S. Seal
Rig Type: Sonic

BORING NO: **B-2**
Sheet 1 of 3

LOCATION
NORTHING EASTING ELEVATION

DEPTH METERS	DEPTH FEET	SAMPLES	WATER LEVEL	GRAPHICAL LOG	UNIFIED SOIL CLASSIFICATION	MATERIAL DESCRIPTION	Dry Density(pcf)	Moisture Content %	Percent minus 200	Liquid Limit	Plasticity Index
0	0				GP-GM	Lacustrine Gravel; Poorly Graded GRAVEL with silt - brown, moist, silt is nonplastic, with occasional red staining					
1	5										
2											
3	10										
4						- wet		1.4	9.0	NP	NP
5	15										
6	20				CL	Residual Bedrock; Lean CLAY with sand - light grey to grey, moist to very moist, organics		18.8	78.2	42	28
7					SC-SM	Silty Clayey SAND - grey-brown, moist, sand is fine to medium grained		14.3	40.1	21	6
8	25				CL	Sandy Lean CLAY - grey-brown, moist, sand is fine-grained, sand decreasing with depth		15.9	65.8	38	22
9					CL	Lean CLAY with sand - grey-brown, moist, sand is fine-grained		11.5	18.1	39	23

Moisture Content and Atterberg Limits

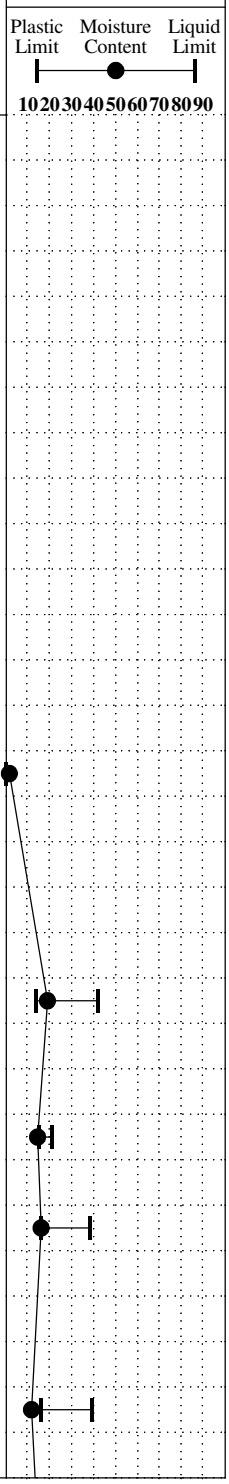

GeoStrata

Copyright (c) 2014, GeoStrata.

SAMPLE TYPE
- GRAB SAMPLE
- 3" O.D. THIN-WALLED HAND SAMPLER

WATER LEVEL
- MEASURED
- ESTIMATED

NOTES:

Plate B-4

DATE	
STARTED:	9/11/14
COMPLETED:	9/11/14
BACKFILLED:	9/11/14

North Salt Lake City
Eagle Pointe Landslide
North Salt Lake, UT
Project Number 920-004

GeoStrata Rep: S. Seal
Rig Type: Sonic

BORING NO: **B-2**
Sheet 2 of 3

LOCATION
NORTHING EASTING ELEVATION

DEPTH METERS	DEPTH FEET	SAMPLES	WATER LEVEL	GRAPHICAL LOG	UNIFIED SOIL CLASSIFICATION	MATERIAL DESCRIPTION	Dry Density(pcf)	Moisture Content %	Percent minus 200	Liquid Limit	Plasticity Index
	30					- light grey-brown, with occasional brown mottling					
								14.7	71.6	33	19
10											
								15.1	82.8	40	23
	35										
11					CL	Sandy Lean CLAY - light grey-brown, moist, sand is fine-grained, with occasional brown mottling - with occasional Fe staining		12.7	68.2	32	19
					GC	Clayey GRAVEL with sand - light grey brown, moist		9.5	23.1	31	17
12	40				CL ML	Sandy Silty CLAY with gravel - grey, moist, sand is medium grained, increasing clay with depth					
								13.9	50.3	27	7
13											
					CL	Sandy Lean CLAY - grey, moist		13.5	59.4	36	18
	45				CL	Sandy Lean CLAY with gravel - green-grey, moist to very moist					
14								12.1	53.0	44	30
					CL	Sandy Lean CLAY - brown, moist, clay has low plasticity, sand is fine-grained					
								12.5	65.0	49	32
15	50				GC	Clayey GRAVEL with sand - light grey, moist, rounded		7.3	19.6	31	16
16								14.9	47.0	42	27
	55										
17					CL	Sandy Lean CLAY with gravel - brown, moist, sand is fine-grained, gravel is rounded, with light Fe staining - 3" seam of Silty GRAVEL with sand		14.5	69.8	38	24
18								14.7	64.6	40	21

Moisture Content and Atterberg Limits

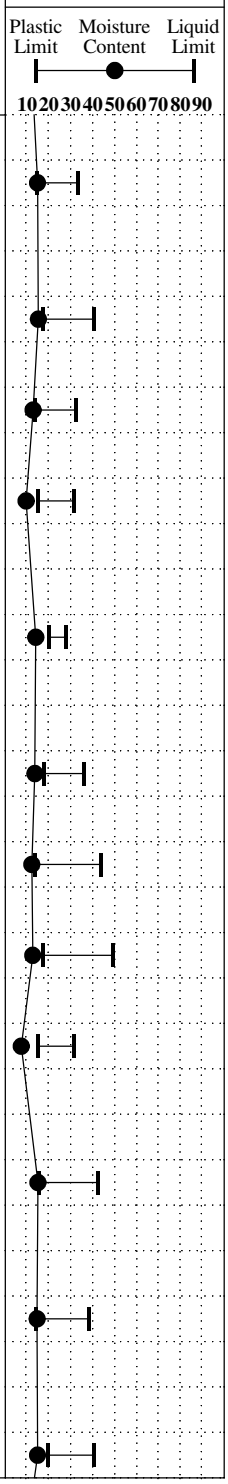

LOG OF BORING (B) - NO BLOW COUNTS BORING LOGS.GPJ GEOSTRATA.GDT 10/22/14

GeoStrata

Copyright (c) 2014, GeoStrata.

SAMPLE TYPE
- GRAB SAMPLE
- 3" O.D. THIN-WALLED HAND SAMPLER

WATER LEVEL
- MEASURED
- ESTIMATED

NOTES:

Plate B-5

DATE	
STARTED:	9/11/14
COMPLETED:	9/11/14
BACKFILLED:	9/11/14

North Salt Lake City
Eagle Pointe Landslide
North Salt Lake, UT
Project Number 920-004

GeoStrata Rep: S. Seal
Rig Type: Sonic

BORING NO: **B-2**
Sheet 3 of 3

LOCATION
NORTHING EASTING ELEVATION

DEPTH METERS	DEPTH FEET	SAMPLES	WATER LEVEL	GRAPHICAL LOG	UNIFIED SOIL CLASSIFICATION	MATERIAL DESCRIPTION	Dry Density(pcf)	Moisture Content %	Percent minus 200	Liquid Limit	Plasticity Index
	60				GC	Clayey GRAVEL with sand - brown, moist, sand is fine-grained, gravel is rounded		9.0	34.1	33	17
19					CH	Sandy Fat CLAY - brown, moist		12.3	56.3	50	31
	65				GC	Clayey GRAVEL with sand - grey, moist		12.0	40.8	49	32
20						- red-brown		8.9	20.2	31	16
21	70				CL	Sandy Lean CLAY with gravel - brown, moist					
						- moist to very moist		15.1	68.8	48	31
22						- red-grey mottling, decreasing gravel		12.4	56.3	40	25
23	75				CL	Competent Bedrock - Volcanic Tuff; Sandy Lean CLAY - grey, moist, sand is fine to medium grained		11.4	53.8	33	16
24								8.3	69.1	45	32
	80				CH	Fat CLAY with sand - grey, moist sand is fine to medium grained		12.1	77.3	60	36
25						- slight increase in clay content		12.5	77.6	54	37
26	85							15.5	72.6	61	37
								19.2	71.0	57	33
27					CH	Fat CLAY - grey, moist		10.7	91.2	81	57

Bottom of Test Pit @ 89 Feet

Moisture Content and Atterberg Limits

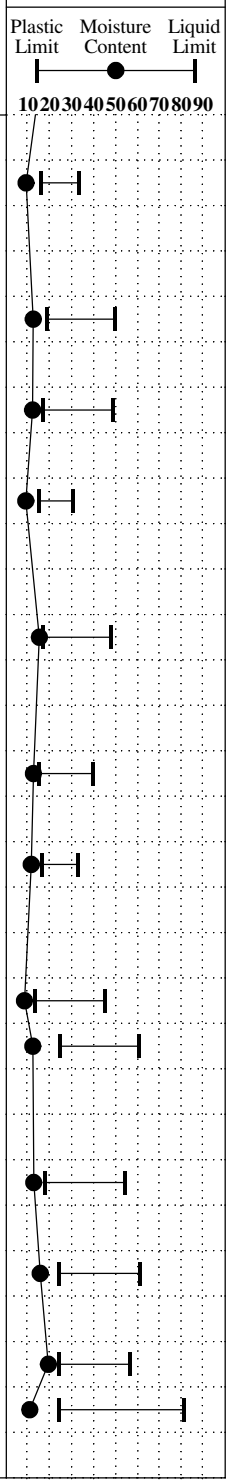

GeoStrata

Copyright (c) 2014, GeoStrata.

SAMPLE TYPE
- GRAB SAMPLE
- 3" O.D. THIN-WALLED HAND SAMPLER

WATER LEVEL
- MEASURED
- ESTIMATED

NOTES:

Plate B-6

CLIENT: Sky Properties
PROJECT: Eaglepointe Slide
PROJECT NUMBER: 1374-004-14

KEY TO BORING LOG

WATER LEVEL	USCS	DESCRIPTION	DEPTH (FT.)	BLOW COUNT	SAMPLE SYMBOL	MOISTURE (%)	DRY DENSITY (PCF)	% PASSSING 200	LIQUID LIMIT (%)	PLASTICITY INDEX	REMARKS
①	②	③	④	⑤	⑥	⑦	⑧	⑨	⑩	⑪	⑫

COLUMN DESCRIPTIONS

① **Water Level:** Depth to measured groundwater table. See symbol below.

② **USCS:** (Unified Soil Classification System) Description of soils encountered; typical symbols are explained below.

③ **Description:** Description of material encountered; may include color, moisture, grain size, density/consistency,

④ **Depth (ft.):** Depth in feet below the ground surface.

⑤ **Blow Count:** Number of blows to advance sampler 12" beyond first 6", using a 140-lb hammer with 30" drop.

⑥ **Sample Symbol:** Type of soil sample collected at depth interval shown; sampler symbols are explained below.

⑦ **Moisture (%):** Water content of soil sample measured in laboratory; expressed as percentage of dryweight of

⑧ **Dry Density (pcf):** The density of a soil measured in laboratory; expressed in pounds per cubic foot.

⑨ **% Passing 200:** Fines content of soils sample passing a No. 200 sieve; expressed as a percentage.

⑩ **Liquid Limit (%):** Water content at which a soil changes from plastic to liquid behavior.

⑪ **Plasticity Index (%):** Range of water content at which a soil exhibits plastic properties.

⑫ **Remarks:** Comments and observations regarding drilling or sampling made by driller or field personnel. May include other field and laboratory test results using the following abbreviations:

CEMENTATION:	MODIFIERS:	MOISTURE CONTENT (FIELD TEST):
Weakly: Crumbles or breaks with handling or slight finger pressure.	**Trace** <5%	**Dry:** Absence of moisture, dusty, dry to the touch.
Moderately: Crumbles or breaks with considerable finger pressure.	**Some** 5-12%	**Moist:** Damp but no visible water.
Strongly: Will not crumble or break with finger pressure.	**With** > 12%	**Saturated:** Visible water, usually soil below water table.

Descriptions and stratum lines are interpretive; field descriptions may have been modified to reflect lab test results. Descriptions on the logs apply only at the specific boring locations and at the time the borings were advanced; they are not warranted to be representative of subsurface conditions at other locations or times.

UNIFIED SOIL CLASSIFICATION SYSTEM (USCS)

MAJOR DIVISIONS			USCS SYMBOLS	TYPICAL DESCRIPTIONS
COARSE-GRAINED SOILS More than 50% of material is larger than No. 200 sieve size.	**GRAVELS** More than 50% of coarse fraction retained on No. 4 sieve.	**CLEAN GRAVELS** (little or no fines)	GW	Well-Graded Gravels, Gravel-Sand Mixtures, Little or No Fines
			GP	Poorly-Graded Gravels, Gravel-Sand Mixtures, Little or No Fines
		GRAVELS WITH FINES (appreciable amount of fines)	GM	Silty Gravels, Gravel-Sand-Silt Mixtures
			GC	Clayey Gravels, Gravel-Sand-Clay Mixtures
	SANDS More than 50% of coarse fraction passing through No. 4 sieve.	**CLEAN SANDS** (little or no fines)	SW	Well-Graded Sands, Gravelly Sands, Little or No Fines
			SP	Poorly-Graded Sands, Gravelly Sands, Little or No Fines
		SANDS WITH FINES (appreciable amount of fines)	SM	Silty Sands, Sand-Silt Mixtures
			SC	Clayey Sands, Sand-Clay Mixtures
FINE-GRAINED SOILS More than 50% of material is smaller than No. 200 sieve size.	**SILTS AND CLAYS** Liquid Limit less than 50%		ML	Inorganic Silts and Very Fine Sands, Rock Flour, Silty or Clayey Fine Sands or Clayey Silts with Slight Plasticity
			CL	Inorganic Clays of Low to Medium Plasticity, Gravelly Clays, Sandy Clays, Silty Clays, Lean Clays
			OL	Organic Silts and Organic Silty Clays o f Low Plasticity
	SILTS AND CLAYS Liquid Limit greater than 50%		MH	Inorganic Silts, Micacious or Diatomacious Fine Sand or Silty Soils
			CH	Inorganic Clays of High Plasticity, Fat Clays
			OH	Organic Silts and Organic Clays of Medium to High Plasticity
HIGHLY ORGANIC SOILS			PT	Peat, Humus, Swamp Soils with High Organic Contents

Note: Dual Symbols are used to indicate borderline soil classifications.

STRATIFICATION:

DESCRIPTION	THICKNESS
Seam	up to 1/8"
Layer	1/8" to 12"

Occasional: One or less per 6" of thickness
Numerous; More than one per 6" of thickness

TYPICAL SAMPLER GRAPHIC SYMBOLS

- Bulk/Bag Sample
- Standard Penetration Split Spoon Sampler
- Rock Core
- No Recovery
- 3.25" OD, 2.42" ID D&M Sampler
- 3.0" OD, 2.42" ID D&M Sampler
- California Sampler
- Thin Wall

WATER SYMBOL

- Water Level

FIGURE 4

GSH

GSH

BORING LOG

BORING: B-1

CLIENT: Sky Properties | PROJECT NUMBER: 1374-004-14

PROJECT: Eaglepointe Slide | DATE STARTED: 6/19/14 | DATE FINISHED: 6/20/14

LOCATION: North Salt Lake, Utah | GSH FIELD REP.: ZM

DRILLING METHOD/EQUIPMENT: 8" OD Hollow-Stem Auger/Rotary Wash HAMMER: Automatic; WEIGHT: 140 lbs; DROP: 30"

GROUNDWATER DEPTH: Not Encountered (6/20/14) | ELEVATION: ---

WATER LEVEL	USCS	DESCRIPTION	DEPTH (FT.)	BLOW COUNT	SAMPLE SYMBOL	MOISTURE (%)	DRY DENSITY (PCF)	% PASSSING 200	LIQUID LIMIT (%)	PLASTICITY INDEX	REMARKS
		Ground Surface									
	SC	CLAYEY FINE TO COARSE SAND trace fine gravel, occasional cobbles up to 4" in size; brown	0								slightly moist medium dense
			5								
				33							
	SM	SILTY FINE SAND with some clay; brown	10								moist to very moist medium dense
				23		27		34			
	SC	CLAYEY FINE SAND with some silt; brown	15								moist to very moist medium dense
				30		24	89	43			
	GP-GM	FINE TO COARSE SANDY FINE GRAVEL with some coarse gravel and some silt; brown	20								moist very dense
				27 50/5"							
			25								

See Subsurface Conditions section in the report for additional information.

FIGURE 3A

GSH	BORING LOG Page: 2 of 3	BORING: B-1

CLIENT: Sky Properties | PROJECT NUMBER: 1374-004-14

PROJECT: Eaglepointe Slide | DATE STARTED: 6/19/14 | DATE FINISHED: 6/20/14

WATER LEVEL	USCS	DESCRIPTION	DEPTH (FT.)	BLOW COUNT	SAMPLE SYMBOL	MOISTURE (%)	DRY DENSITY (PCF)	% PASSSING 200	LIQUID LIMIT (%)	PLASTICITY INDEX	REMARKS
		grades with some cobbles and possibly small boulders below 25'; -Switched to rotary wash	25								
			30	50/5"		10		8			
		lost water circulation at 31'; added drill mud to improve circulation									
			35	40 50/3"						NP	
		slow drill advancement									
				50/5"							
			40								
			45	46 50/3"							
		8" size cobble at 49'									
			50	80							

See Subsurface Conditions section in the report for additional information.

FIGURE 3A
(continued)

GSH	BORING LOG Page: 3 of 3	BORING: B-1

CLIENT: Sky Properties | PROJECT NUMBER: 1374-004-14

PROJECT: Eaglepointe Slide | DATE STARTED: 6/19/14 | DATE FINISHED: 6/20/14

WATER LEVEL	USCS	DESCRIPTION	DEPTH (FT.)	BLOW COUNT	SAMPLE SYMBOL	MOISTURE (%)	DRY DENSITY (PCF)	% PASSSING 200	LIQUID LIMIT (%)	PLASTICITY INDEX	REMARKS
		FINE TO COARSE SANDY FINE GRAVEL (continued)	52								
		End of Exploration (too much torque) at 54.0' No groundwater encountered at time of drilling. Installed 1.25" diameter slotted PVC pipe to 54.0'.	55								
			60								
			65								
			70								
			75								

See Subsurface Conditions section in the report for additional information.

FIGURE 3A
(continued)

GSH	BORING LOG Page: 1 of 3	BORING: B-2

CLIENT: Sky Properties | PROJECT NUMBER: 1374-004-14

PROJECT: Eaglepointe Slide | DATE STARTED: 6/20/14 | DATE FINISHED: 6/25/14

LOCATION: North Salt Lake, Utah | GSH FIELD REP.: ZM

DRILLING METHOD/EQUIPMENT: 8" OD Hollow-Stem Auger/Rotary Wash HAMMER: Automatic; WEIGHT: 140 lbs; DROP: 30"

GROUNDWATER DEPTH: 33.0' (6/25/14) | ELEVATION: ---

WATER LEVEL	USCS	DESCRIPTION	DEPTH (FT.)	BLOW COUNT	SAMPLE SYMBOL	MOISTURE (%)	DRY DENSITY (PCF)	% PASSSING 200	LIQUID LIMIT (%)	PLASTICITY INDEX	REMARKS
		Ground Surface									
	SM FILL	FILL, SILTY FINE SAND with some clay and fine gravel; brown	0								slightly moist loose
			5								
		grades with trace coarse sand	10	19							
			15	22		8		20			
			20	11							
	SC	CLAYEY FINE SAND with some silt; brown	25	29		23	102		27	9	very moist medium dense

See Subsurface Conditions section in the report for additional information.

FIGURE 3B

GSH

BORING LOG

BORING: B-2

CLIENT: Sky Properties | PROJECT NUMBER: 1374-004-14

PROJECT: Eaglepointe Slide | DATE STARTED: 6/20/14 | DATE FINISHED: 6/25/14

WATER LEVEL	USCS	DESCRIPTION	DEPTH (FT.)	BLOW COUNT	SAMPLE SYMBOL	MOISTURE (%)	DRY DENSITY (PCF)	% PASSSING 200	LIQUID LIMIT (%)	PLASTICITY INDEX	REMARKS
		CLAYEY FINE SAND (continued)	25	29		23	102		27	9	
	GC-GM	SILTY CLAYEY FINE AND COARSE GRAVEL with fine to coarse sand; brown	30	24 50/6"							moist very dense
			35								saturated
				38 50/6"		8		13			
		gravel is rounded to subrounded -Switched to rotary wash	40	40 50/3"					19	5	
			45	60/5"							
			50	50/5"							

See Subsurface Conditions section in the report for additional information.

FIGURE 3B (continued)

GSH	BORING LOG Page: 3 of 3	BORING: B-2

CLIENT: Sky Properties | PROJECT NUMBER: 1374-004-14

PROJECT: Eaglepointe Slide | DATE STARTED: 6/20/14 | DATE FINISHED: 6/25/14

WATER LEVEL	USCS	DESCRIPTION	DEPTH (FT.)	BLOW COUNT	SAMPLE SYMBOL	MOISTURE (%)	DRY DENSITY (PCF)	% PASSSING 200	LIQUID LIMIT (%)	PLASTICITY INDEX	REMARKS
		SILTY CLAYEY FINE AND COARSE GRAVEL (continued)	52								
				50/3"							
		End of Exploration (too much torque) at 54.0' Installed Inclinometer Pipe to 54.0'	55								
			60								
			65								
			70								
			75								

See Subsurface Conditions section in the report for additional information.

FIGURE 3B
(continued)

GSH

BORING LOG

BORING: B-3

CLIENT: Sky Properties | PROJECT NUMBER: 1374-004-14

PROJECT: Eaglepointe Slide | DATE STARTED: 6/26/14 | DATE FINISHED: 6/26/14

LOCATION: North Salt Lake, Utah | GSH FIELD REP.: ZM

DRILLING METHOD/EQUIPMENT: 8" OD Hollow-Stem Auger/Rotary Wash HAMMER: Automatic; WEIGHT: 140 lbs; DROP: 30"

GROUNDWATER DEPTH: Not Encountered (6/26/14) | ELEVATION: ---

WATER LEVEL	USCS	DESCRIPTION	DEPTH (FT.)	BLOW COUNT	SAMPLE SYMBOL	MOISTURE (%)	DRY DENSITY (PCF)	% PASSSING 200	LIQUID LIMIT (%)	PLASTICITY INDEX	REMARKS
		Ground Surface									
	SM FILL	FILL, SILTY FINE SAND with some clay; brown	0								moist very loose
			5	7							
			10	16							loose
	SM	SILTY FINE SAND with some thin layers of fine sandy clay; brown	15	13		11	83	43			moist loose
	GP-GC-	FINE TO COARSE SANDY FINE AND COARSE GRAVEL with some clay; brown Auger refusal at 18', switched to rotary wash		50/2"							moist very dense
			20								
			25	40							

See Subsurface Conditions section in the report for additional information.

FIGURE 3C

GSH	BORING LOG Page: 2 of 2	BORING: B-3

CLIENT: Sky Properties | PROJECT NUMBER: 1374-004-14

PROJECT: Eaglepointe Slide | DATE STARTED: 6/26/14 | DATE FINISHED: 6/26/14

WATER LEVEL	USCS	DESCRIPTION	DEPTH (FT.)	BLOW COUNT	SAMPLE SYMBOL	MOISTURE (%)	DRY DENSITY (PCF)	% PASSSING 200	LIQUID LIMIT (%)	PLASTICITY INDEX	REMARKS
		FINE TO COARSE SANDY FINE AND COARSE GRAVEL	25	40 50/4"							
			30	68		9		11			
		lost circulation at 33'	35	49							
	GP	FINE TO COARSE SANDY FINE AND COARSE GRAVEL with trace silt; brown	40	46 50/4"							moist very dense
			45	41 50/2"							
			50	24 31 50/4"							
		End of Exploration at 51.5'. Installed Inclinometer Pipe to 51.5'									

See Subsurface Conditions section in the report for additional information.

FIGURE 3C
(continued)

GSH

BORING LOG

BORING: B-4

CLIENT: Sky Properties | PROJECT NUMBER: 1374-004-14

PROJECT: Eaglepointe Slide | DATE STARTED: 8/8/14 | DATE FINISHED: 8/8/14

LOCATION: North Salt Lake, Utah | GSH FIELD REP.: GS

DRILLING METHOD/EQUIPMENT: ODEX / HQ Coring | HAMMER: Automatic | WEIGHT: 140 lbs | DROP: 30"

GROUNDWATER DEPTH: Not Encountered (8/8/14) | ELEVATION: ---

WATER LEVEL	USCS	DESCRIPTION	DEPTH (FT.)	BLOW COUNT	SAMPLE SYMBOL	MOISTURE (%)	DRY DENSITY (PCF)	% PASSING 200	LIQUID LIMIT (%)	PLASTICITY INDEX	REMARKS
		Ground Surface									
	SC	CLAYEY FINE SAND with some fine gravel; red-gray	0								slightly moist dense
			5	32		8		30	37	19	
	SM	SILTY FINE SAND with some fine gravel; light brown	10	28		3		19			dry medium dense
	CH	FINE SANDY CLAY red (possibly weathered bedrock)									dry hard
			15	50/2"							
		SILTSTONE with sand-silt grains; moderately fractured; light reddish-brown	20								dry moderately hard **Core Run 1:** 20' - 25' 36" recovered RQD = 20%
			25								

See Subsurface Conditions section in the report for additional information.

FIGURE 3D

GSH	BORING LOG Page: 2 of 2	BORING: B-4

CLIENT: Sky Properties | PROJECT NUMBER: 1374-004-14

PROJECT: Eaglepointe Slide | DATE STARTED: 8/8/14 | DATE FINISHED: 8/8/14

WATER LEVEL	USCS	DESCRIPTION	DEPTH (FT.)	BLOW COUNT	SAMPLE SYMBOL	MOISTURE (%)	DRY DENSITY (PCF)	% PASSSING 200	LIQUID LIMIT (%)	PLASTICITY INDEX	REMARKS
		SILTSTONE (continued) highly fractured	25								**Core Run 2:** 25' - 30' 24" recovered RQD = 0%
		End of Exploration at 30.0'. No groundwater encountered at time of drilling. About 30.3' of inclinometer casing installed to depth of about 29' with about 1.3' above ground surface. Casing was slotted and backfilled with sand below 10'. Upper 10' was backfilled with bentonite chips.	30 35 40 45 50								

See Subsurface Conditions section in the report for additional information.

FIGURE 3D
(continued)

GSH

BORING LOG

BORING: B-5

CLIENT: Sky Properties | PROJECT NUMBER: 1374-004-14

PROJECT: Eaglepointe Slide | DATE STARTED: 8/8/14 | DATE FINISHED: 8/8/14

LOCATION: North Salt Lake, Utah | GSH FIELD REP.: GS

DRILLING METHOD/EQUIPMENT: ODEX / HQ Coring | HAMMER: Automatic | WEIGHT: 140 lbs | DROP: 30"

GROUNDWATER DEPTH: Not Encountered (8/8/14); 19.0' (9/1/14); 19.7' (9/20/14) | ELEVATION: ---

WATER LEVEL	USCS	DESCRIPTION	DEPTH (FT.)	BLOW COUNT	SAMPLE SYMBOL	MOISTURE (%)	DRY DENSITY (PCF)	% PASSSING 200	LIQUID LIMIT (%)	PLASTICITY INDEX	REMARKS
		Ground Surface									
	FILL	ASPHALT & ROAD BASE, FILL	0								
	CL	FINE SANDY SILTY CLAY with occasional fine sand laminae; light reddish-brown		23							moist very stiff
				13		26		54	49	32	stiff
			5	16							
				15							
				18							very stiff
			10	24							
				9 50/5"		13		54			hard
	SC	CLAYEY FINE SAND highly plastic; light reddish-brown	15	66		15		44	73	55	moist very dense
				5 50/6"							
		CLAYSTONE-SILTSTONE with clay to silt particles; massive, highly to moderately fractured; light reddish-brown	20								dry moderately hard **Core Run 1:** 20' - 25' 12" recovered RQD = 0%
			25								

See Subsurface Conditions section in the report for additional information.

FIGURE 3E

GSH	BORING LOG Page: 2 of 2	BORING: B-5

CLIENT: Sky Properties | PROJECT NUMBER: 1374-004-14

PROJECT: Eaglepointe Slide | DATE STARTED: 8/8/14 | DATE FINISHED: 8/8/14

WATER LEVEL	USCS	DESCRIPTION	DEPTH (FT.)	BLOW COUNT	SAMPLE SYMBOL	MOISTURE (%)	DRY DENSITY (PCF)	% PASSSING 200	LIQUID LIMIT (%)	PLASTICITY INDEX	REMARKS
		CLAYSTONE-SILTSTONE (continued)	25								**Core Run 2:** 25' - 30' 54" recovered RQD = 75%
			30								**Core Run 3:** 30' - 35' 60" recovered RQD = 75%
		End of Exploration at 35.0'. No groundwater encountered at time of drilling. About 33.5' of inclinometer casing installed to depth of about 33.5' with top of pipe flush with ground surface. Casing was slotted and backfilled with sand below 15'. Upper 15' was backfilled with bentonite chips.	35								
			40								
			45								
			50								

See Subsurface Conditions section in the report for additional information.

FIGURE 3E
(continued)

GSH	BORING LOG Page: 1 of 4	BORING: B-6

CLIENT: Sky Properties | PROJECT NUMBER: 1374-004-14

PROJECT: Eaglepointe Slide | DATE STARTED: 8/15/14 | DATE FINISHED: 8/18/14

LOCATION: North Salt Lake, Utah | GSH FIELD REP.: HW

DRILLING METHOD/EQUIPMENT: 8" OD Hollow-Stem Auger | HAMMER: Automatic | WEIGHT: 140 lbs | DROP: 30"

GROUNDWATER DEPTH: Not Encountered (8/18/14); 86.6' (9/1/14); 85.7' (9/20/14) | ELEVATION: ---

WATER LEVEL	USCS	DESCRIPTION	DEPTH (FT.)	BLOW COUNT	SAMPLE SYMBOL	MOISTURE (%)	DRY DENSITY (PCF)	% PASSSING 200	LIQUID LIMIT (%)	PLASTICITY INDEX	REMARKS
		Ground Surface									
	GP FILL	FINE AND COARSE GRAVEL, FILL AND/OR DISTURBED with some fine to coarse sand and some silt; brown	0								moist loose
			5	9							
		grades with some clay	10	4							very loose
			15	4							
			20	3		1		2			slightly moist very moist
	CL	SILTY CLAY with some fine sand; brown									moist stiff
			25								

See Subsurface Conditions section in the report for additional information.

FIGURE 3F

GSH

BORING LOG

BORING: B-6

CLIENT: Sky Properties | PROJECT NUMBER: 1374-004-14

PROJECT: Eaglepointe Slide | DATE STARTED: 8/15/14 | DATE FINISHED: 8/18/14

WATER LEVEL	USCS	DESCRIPTION	DEPTH (FT.)	BLOW COUNT	SAMPLE SYMBOL	MOISTURE (%)	DRY DENSITY (PCF)	% PASSSING 200	LIQUID LIMIT (%)	PLASTICITY INDEX	REMARKS
		SILTY CLAY (continued) grades with 1/8" sand lenses	25	12							
				17							very moist
	GC	CLAYEY FINE AND COARSE GRAVEL with some fine to coarse sand; brown		26							slightly moist medium dense
		gravel grades out	30	40		7		27	28	13	dense
	SM/ML	SILTY FINE SAND/FINE SANDY SILT with some clay and trace medium to coarse sand; brown									moist med.dense/very stiff
	CL/SC	FINE SANDY CLAY/CLAYEY FINE SAND with some silt; reddish-brown		26							moist very stiff/med.dense
			35	23							
				24							
	CL	SILTY CLAY with fine sand and angular gravel; gray grades with less fine sand but some angular gravel; reddish-brown		26							moist medium stiff
	GC	CLAYEY FINE GRAVEL with some fine to coarse sand; trace coarse gravel; brown	40	34		15	107	16	28	13	moist medium dense
	GP	FINE TO COARSE SANDY FINE AND COARSE GRAVEL with trace to some clay; orange-brown grades with cobbles up to 5" in diameter		46							slightly moist medium dense
	CL	FINE SANDY CLAY with some silt; trace medium to coarse sand; brown appears disturbed at 45' - 46' (possible slide plane)	45	26							moist very stiff
	GC	CLAYEY FINE AND COARSE GRAVEL with fine to coarse sand; brown		36		8		35	29	17	slightly moist medium dense
	CL	SILTY CLAY with some fine gravel; gray		22							moist very stiff
	SC	CLAYEY FINE SAND orange-brown grades with some medium to coarse sand	50	52							moist medium dense

See Subsurface Conditions section in the report for additional information.

FIGURE 3F
(continued)

GSH

BORING LOG

BORING: B-6

CLIENT: Sky Properties | PROJECT NUMBER: 1374-004-14

PROJECT: Eaglepointe Slide | DATE STARTED: 8/15/14 | DATE FINISHED: 8/18/14

WATER LEVEL	USCS	DESCRIPTION	DEPTH (FT.)	BLOW COUNT	SAMPLE SYMBOL	MOISTURE (%)	DRY DENSITY (PCF)	% PASSSING 200	LIQUID LIMIT (%)	PLASTICITY INDEX	REMARKS
	CL	FINE SANDY CLAY trace medium to coarse sand; trace fine gravel; orange-brown	52	41		16	110	51	49	33	moist very stiff
			55	75							hard
		coarse sand, fine gravel grade out		34							very stiff
				34							
			60	47 75/2"							
	CL	FINE AND COARSE GRAVELLY CLAY with some fine to coarse sand; reddish-brown cobble at 61'									moist very stiff
				39		20	100	60	46	32	
	CL	SILTY CLAY with some fine sand; trace medium to coarse sand; brown	65	64							moist hard
		grades with some fine to coarse sand; trace fine and coarse gravel; reddish-brown		34							very stiff
			70	66							hard
		grades with more sand and gravel		49		11	104	50	40	25	very stiff
	GC	CLAYEY FINE AND COARSE GRAVEL with some fine to coarse sand; reddish-brown	75								moist medium dense
	CL	SILTY CLAY with some fine sand; trace medium to coarse sand; brown		36							moist very stiff

See Subsurface Conditions section in the report for additional information.

FIGURE 3F
(continued)

GSH

BORING LOG

BORING: B-6

CLIENT: Sky Properties | PROJECT NUMBER: 1374-004-14

PROJECT: Eaglepointe Slide | DATE STARTED: 8/15/14 | DATE FINISHED: 8/18/14

WATER LEVEL	USCS	DESCRIPTION	DEPTH (FT.)	BLOW COUNT	SAMPLE SYMBOL	MOISTURE (%)	DRY DENSITY (PCF)	% PASSSING 200	LIQUID LIMIT (%)	PLASTICITY INDEX	REMARKS
		SILTY CLAY (continued)	79								
			80	55							
	SC	CLAYEY FINE SAND bright reddish-brown									moist medium dense
	CL	SILTY CLAY with some fine sand; olive green									moist very stiff
			85	39							very moist
	GC	CLAYEY FINE AND COARSE GRAVEL (CLAYSTONE- with some fine to coarse sand; reddish-brown									moist dense
			90	45 75 75/4"							slightly moist very dense
		hard drilling									
			95	58 75/2"							
		End of Exploration at 96.0'. No groundwater encountered at time of drilling. About 98' of inclinometer casing installed to depth of about 94.5' with about 3.5' above ground surface. Casing was slotted and backfilled with sand below 25'. Upper 25' was backfilled with bentonite chips.	100								
			105								

See Subsurface Conditions section in the report for additional information.

FIGURE 3F
(continued)

GSH

BORING LOG

BORING: B-7

CLIENT: Sky Properties | PROJECT NUMBER: 1374-004-14

PROJECT: Eaglepointe Slide | DATE STARTED: 8/19/14 | DATE FINISHED: 8/20/14

LOCATION: North Salt Lake, Utah | GSH FIELD REP.: HW

DRILLING METHOD/EQUIPMENT: 8" OD Hollow-Stem Auger | HAMMER: Automatic | WEIGHT: 140 lbs | DROP: 30"

GROUNDWATER DEPTH: Not Encountered (8/20/14); 52.9' (9/20/14) | ELEVATION: ---

WATER LEVEL	USCS	DESCRIPTION	DEPTH (FT.)	BLOW COUNT	SAMPLE SYMBOL	MOISTURE (%)	DRY DENSITY (PCF)	% PASSING 200	LIQUID LIMIT (%)	PLASTICITY INDEX	REMARKS
		Ground Surface									
	GP FILL	FINE TO COARSE SANDY FINE AND COARSE GRAVEL, with some silt and clay; brown	0								moist loose
			5	13							
			10	16							
				20							
			15	17		2		4			slightly moist
				6							very loose
				10							no recovery
			20	21							loose
				11							very moist
	CL	SILTY CLAY with some fine sand; brown	25	16		25		63	41	23	very moist stiff

See Subsurface Conditions section in the report for additional information.

FIGURE 3G

GSH

BORING LOG

BORING: B-7

CLIENT: Sky Properties | PROJECT NUMBER: 1374-004-14

PROJECT: Eaglepointe Slide | DATE STARTED: 8/19/14 | DATE FINISHED: 8/20/14

WATER LEVEL	USCS	DESCRIPTION	DEPTH (FT.)	BLOW COUNT	SAMPLE SYMBOL	MOISTURE (%)	DRY DENSITY (PCF)	% PASSSING 200	LIQUID LIMIT (%)	PLASTICITY INDEX	REMARKS
		SILTY CLAY (continued)	25	16		25		63	41	23	very moist stiff
		appears disturbed at 27' - 28' (possible slide plane)		15							
		grades gray with trace coarse gravel		14							
			30	13							moist
			35								
		grades brown		19		30	90	84	40	23	very moist
			40	14							
				17							
		grades gray	45	60		14	118	75	57	39	hard
		CLAYSTONE-SILTSTONE moderately fractured; light reddish-brown		23 75/6"							dry soft to slightly hard
				75/4"							moderately hard
			50	45 75/3"							

See Subsurface Conditions section in the report for additional information.

FIGURE 3G
(continued)

GSH	BORING LOG Page: 3 of 3	BORING: B-7

CLIENT: Sky Properties | PROJECT NUMBER: 1374-004-14

PROJECT: Eaglepointe Slide | DATE STARTED: 8/19/14 | DATE FINISHED: 8/20/14

WATER LEVEL	USCS	DESCRIPTION	DEPTH (FT.)	BLOW COUNT	SAMPLE SYMBOL	MOISTURE (%)	DRY DENSITY (PCF)	% PASSSING 200	LIQUID LIMIT (%)	PLASTICITY INDEX	REMARKS
		CLAYSTONE-SILTSTONE (continued)	52								
			55	75/3"							
		End of Exploration at 55.5'. No groundwater encountered at time of drilling. About 58.2' of inclinometer casing installed to depth of about 54.7' with about 3.5' above ground surface. Casing was slotted and backfilled with sand below 20'. Upper 20' was backfilled with bentonite chips.	60								
			65								
			70								
			75								

See Subsurface Conditions section in the report for additional information.

FIGURE 3G
(continued)

GSH

BORING LOG

BORING: B-8

CLIENT: Sky Properties | PROJECT NUMBER: 1374-004-14

PROJECT: Eaglepointe Slide | DATE STARTED: 8/20/14 | DATE FINISHED: 8/21/14

LOCATION: North Salt Lake, Utah | GSH FIELD REP.: HW

DRILLING METHOD/EQUIPMENT: 8" OD Hollow-Stem Auger / HQ Coring | HAMMER: Automatic; WEIGHT: 140 lbs; DROP: 30"

GROUNDWATER DEPTH: Not Encountered (8/21/14); 21.7' (9/1/14); 23.8' (9/20/14) | ELEVATION: ---

WATER LEVEL	USCS	DESCRIPTION	DEPTH (FT.)	BLOW COUNT	SAMPLE SYMBOL	MOISTURE (%)	DRY DENSITY (PCF)	% PASSSING 200	LIQUID LIMIT (%)	PLASTICITY INDEX	REMARKS
		Ground Surface									
	GP	FINE TO COARSE SANDY FINE AND COARSE GRAVEL with some silt; reddish-brown	0								slightly moist loose to medium dense
		grades with more silt	5	16		4		21			
	GC	CLAYEY FINE AND COARSE GRAVEL reddish-brown									moist medium dense
		Boulder 15" in thickness at 11'	10	15 75/4"		9	110	16	32	18	dense
	CL	SILTY CLAY with some fine to coarse sand; trace gravel; reddish-brown									moist hard
		CLAYSTONE - SILTSTONE moderately fractured; light reddish-brown	15	75/6"							dry moderately hard **Core Run 1:** 15.5' - 18.0' 24" recovered RQD = 44%
			20								**Core Run 2:** 18' - 23' 58" recovered RQD = 59%
			25								**Core Run 3:** 23' - 28' 57" recovered RQD = 78%

See Subsurface Conditions section in the report for additional information.

FIGURE 3H

GSH	BORING LOG Page: 2 of 2	BORING: B-8

CLIENT: Sky Properties | PROJECT NUMBER: 1374-004-14

PROJECT: Eaglepointe Slide | DATE STARTED: 8/20/14 | DATE FINISHED: 8/21/14

WATER LEVEL	USCS	DESCRIPTION	DEPTH (FT.)	BLOW COUNT	SAMPLE SYMBOL	MOISTURE (%)	DRY DENSITY (PCF)	% PASSSING 200	LIQUID LIMIT (%)	PLASTICITY INDEX	REMARKS
		CLAYSTONE - SILTSTONE (continued)	25								
		End of Exploration at 28.0'. No groundwater encountered at time of drilling. About 25.4' of inclinometer casing installed to depth of about 25.4' with top of pipe flush with ground surface. Casing was slotted and backfilled with sand below 10'. Upper 10' was backfilled with bentonite chips.	30 35 40 45 50								

See Subsurface Conditions section in the report for additional information.

FIGURE 3H
(continued)

SOIL CLASSIFICATION CHART

MAJOR DIVISIONS			SYMBOLS GRAPH	SYMBOLS LETTER	TYPICAL DESCRIPTIONS
COARSE GRAINED SOILS MORE THAN 50% RETAINED ON NO. 200 SIEVE	GRAVEL AND GRAVELLY SOILS MORE THAN 50% OF COARSE FRACTION RETAINED ON NO. 4 SIEVE	CLEAN GRAVELS (LITTLE OR NO FINES)		GW	WELL-GRADED GRAVELS, GRAVEL - SAND MIXTURES
				GP	POORLY-GRADED GRAVELS, GRAVEL - SAND MIXTURES
		GRAVELS WITH FINES (APPRECIABLE AMOUNT OF FINES)		GM	SILTY GRAVELS, GRAVEL - SAND - SILT MIXTURES
				GC	CLAYEY GRAVELS, GRAVEL - SAND - CLAY MIXTURES
	SAND AND SANDY SOILS MORE THAN 50% OF COARSE FRACTION PASSING NO. 4 SIEVE	CLEAN SANDS (LITTLE OR NO FINES)		SW	WELL-GRADED SANDS, GRAVELLY SANDS
				SP	POORLY-GRADED SANDS, GRAVELLY SAND
		SANDS WITH FINES (APPRECIABLE AMOUNT OF FINES)		SM	SILTY SANDS, SAND - SILT MIXTURES
				SC	CLAYEY SANDS, SAND - CLAY MIXTURES
FINE GRAINED SOILS MORE THAN 50% PASSING NO. 200 SIEVE	SILTS AND CLAYS	LIQUID LIMIT LESS THAN 50		ML	INORGANIC SILTS, ROCK FLOUR, CLAYEY SILTS WITH SLIGHT PLASTICITY
				CL	INORGANIC CLAYS OF LOW TO MEDIUM PLASTICITY, GRAVELLY CLAYS, SANDY CLAYS, SILTY CLAYS, LEAN CLAYS
				OL	ORGANIC SILTS AND ORGANIC SILTY CLAYS OF LOW PLASTICITY
	SILTS AND CLAYS	LIQUID LIMIT GREATER THAN 50		MH	INORGANIC SILTS, MICACEOUS OR DIATOMACEOUS SILTY SOILS
				CH	INORGANIC CLAYS OF HIGH PLASTICITY
				OH	ORGANIC CLAYS AND SILTS OF MEDIUM TO HIGH PLASTICITY
HIGHLY ORGANIC SOILS				PT	PEAT, HUMUS, SWAMP SOILS WITH HIGH ORGANIC CONTENTS

NOTE: Multiple symbols are used to indicate borderline or dual soil classifications

ADDITIONAL MATERIAL SYMBOLS

SYMBOLS GRAPH	SYMBOLS LETTER	TYPICAL DESCRIPTIONS
	AC	Asphalt Concrete
	CC	Cement Concrete
	CR	Crushed Rock/ Quarry Spalls
	TS	Topsoil/ Forest Duff/Sod

Groundwater Contact

Measured groundwater level in exploration, well, or piezometer

Measured free product in well or piezometer

Graphic Log Contact

Distinct contact between soil strata or geologic units

Approximate location of soil strata change within a geologic soil unit

Material Description Contact

Distinct contact between soil strata or geologic units

Approximate location of soil strata change within a geologic soil unit

Sampler Symbol Descriptions

2.4-inch I.D. split barrel

Standard Penetration Test (SPT)

Shelby tube

Piston

Direct-Push

Bulk or grab

Blowcount is recorded for driven samplers as the number of blows required to advance sampler 12 inches (or distance noted). See exploration log for hammer weight and drop.

A "P" indicates sampler pushed using the weight of the drill rig.

Laboratory / Field Tests

%F	Percent fines
AL	Atterberg limits
CA	Chemical analysis
CP	Laboratory compaction test
CS	Consolidation test
DS	Direct shear
HA	Hydrometer analysis
MC	Moisture content
MD	Moisture content and dry density
OC	Organic content
PM	Permeability or hydraulic conductivity
PI	Plasticity index
PP	Pocket penetrometer
PPM	Parts per million
SA	Sieve analysis
TX	Triaxial compression
UC	Unconfined compression
VS	Vane shear

Sheen Classification

NS	No Visible Sheen
SS	Slight Sheen
MS	Moderate Sheen
HS	Heavy Sheen
NT	Not Tested

NOTE: The reader must refer to the discussion in the report text and the logs of explorations for a proper understanding of subsurface conditions. Descriptions on the logs apply only at the specific exploration locations and at the time the explorations were made; they are not warranted to be representative of subsurface conditions at other locations or times.

DRAFT

KEY TO EXPLORATION LOGS

GEOENGINEERS

FIGURE A-1

Drilled	Start 8/7/2014	End 8/7/2014	Total Depth (ft)	54	Logged By / Checked By	MCK / TNH	Driller	Earthcore Drilling, Inc.	Drilling Method	ODEX
Surface Elevation (ft) Vertical Datum	5146.3		Hammer Data	140 (lbs) / 30 (in) Drop	Drilling Equipment	Mobile B-80 Truck Mounted				
Latitude / Longitude	1528957.745 / 3460565.031		System Datum	Geographic / Utah State Plane North	Groundwater	Date Measured	Depth to Water (ft)	Elevation (ft)		
Notes: Upon completion, borehole backfilled with bentonite chips							Not encountered	N/A		

Elevation (feet)	Depth (feet)	Interval	Recovered (in)	Blows/foot	Collected Sample	Sample Name	Water Level	Graphic Log	Group Classification	MATERIAL DESCRIPTION	Moisture Content, %	Dry Density, (pcf)	REMARKS
5145	0								SM				
			15	25		1				Light brown silty fine sand with occasional gravel (loose, dry)			
5140	5		18	32		2				Becomes medium dense	4		% Fines = 24 % Gravel = 6
			18	38		3							
									ML				
5135	10		18	45		4				Light brown sandy silt with trace gravel (very stiff, moist)	7		% Fines = 54 % Gravel = 1
									SM				
5130	15		15	38		5				Light brown silty sand with occasional gravel and small roots (medium dense, moist)			
5125	20		18	30		6					6		% Fines = 27 % Gravel = 2
5120	25		18	36		7				Becomes grayish tan			
									GP-GM				
5115	30		11	65		8				Light brown and gray poorly graded gravel with silt and sand (medium dense, moist)		2	% Fines = 8 % Gravel = 58
									GP	Light brown and gray poorly graded gravel with silt and sand (medium dense, moist)			
	35												

Note: See Figure A-1 for explanation of symbols.

DRAFT

Portland: Date:8/29/14 Path:\\SGF\PROJECTS\16\16265002\09\GINT\NORTH SALT LAKE LANDSLIDE.GPJ DBTemplate\LibTemplate\GEOENGINEERS9.GDT/GEI8_GEOTECH_STANDARD

Log of B-1

GEOENGINEERS

Project: Eagle Crest Landslide
Project Location: North Salt Lake, Utah
Project Number: 16265-002-09

Figure A-2
Sheet 1 of 2

Elevation (feet)	Depth (feet)	FIELD DATA: Interval	Recovered (in)	Blows/foot	Collected Sample	Sample Name	Water Level	Graphic Log	Group Classification	MATERIAL DESCRIPTION	Moisture Content, %	Dry Density, (pcf)	REMARKS
5110	35		4	73		9			GP	Light brown and gray poorly graded gravel with sand (medium dense, moist)			
5105	40		18	16		10			GP	Becomes loose			
5100	45		2	55/3"		11				Becomes dense, more coarse			
5095	50		18	34		12							

DRAFT

Note: See Figure A-1 for explanation of symbols.

Log of B-1 (continued)

GEOENGINEERS

Project: Eagle Crest Landslide
Project Location: North Salt Lake, Utah
Project Number: 16265-002-09

Figure A-2
Sheet 2 of 2

Portland: Date:8/29/14 Path:\\SGF\PROJECTS\16\16265002\09\GINT\NORTH SALT LAKE LANDSLIDE.GPJ DBTemplate\LibTemplate\GEOENGINEERS8.GDT/GEI8_GEOTECH_STANDARD

Drilled	Start 8/12/2014	End 8/13/2014	Total Depth (ft)	115	Logged By / Checked By	MCK / TNH	Driller	Earthcore Drilling, Inc.	Drilling Method	ODEX/Rock Core
Surface Elevation (ft) Vertical Datum	5133.8		Hammer Data	140 (lbs) / 30 (in) Drop	Drilling Equipment	Mobile B-80 Truck Mounted				
Latitude / Longitude	1528770.719 / 3460682.261		System Datum	Geographic / Utah State Plane North	Groundwater	Date Measured: 8/22/2014	Depth to Water (ft): 57	Elevation (ft): 5076.8		

Notes: Installed inclinometer upon completion.

Elevation (feet)	Depth (feet)	Interval	Recovered (in)	Blows/foot	Collected Sample	Sample Name	Water Level	Graphic Log	Group Classification	MATERIAL DESCRIPTION	Moisture Content, %	Dry Density, (pcf)	REMARKS
	0								SM				
5130			18	18		1				Brown silty sand with gravel and clay (loose, moist) (fill)			
	5		6	13		2			SP	Light brown and gray fine sand with roots (medium dense, moist)			
5125			6	32		3			SP-SM	Brown gravelly sand with silt, clay and small roots (medium dense, moist)			
	10		5	20		4			ML	Light brown silt with sand and clay (very stiff, moist)			
5120													
	15		18	34		5							% Fines = 88
5115													
	20		6	16		6				Becomes stiff			
5110									SM				
	25		5	50/5"		7				Light brown silty fine sand with trace clay (very dense, moist)			
5105													
	30		18	90		8				Becomes moist light brown and white silty sand with gravel			% Fines = 16 % Gravel = 38
5100													
	35												

Note: See Figure A-1 for explanation of symbols.

DRAFT

Portland: Date:8/29/14 Path:\\SGF\PROJECTS\16\16265002\09\GINT\NORTH SALT LAKE LANDSLIDE.GPJ DBTemplate\LibTemplate\GEOENGINEERS8.GDT/GEI8_GEOTECH_STANDARD

Log of B-4 & B-4A

GeoEngineers

Project: Eagle Crest Landslide
Project Location: North Salt Lake, Utah
Project Number: 16265-002-09

Figure A-3
Sheet 1 of 3

Elevation (feet)	Depth (feet)	Interval	Recovered (in)	Blows/foot	Collected Sample	Sample Name	Water Level	Graphic Log	Group Classification	MATERIAL DESCRIPTION	Moisture Content, %	Dry Density, (pcf)	REMARKS
	35		7	70		9			SM	Light brown and white silty sand with gravel (very dense, dry)			
5095									GP				
	40		5	5		10				Gray poorly graded gravel (loose, dry)			
5090									SM				
	45		5	50/5"		11				Light brown and gray silty sand with gravel (very dense, dry)			
5085													
	50		8	50/5"		12							% Fines = 14 % Gravel = 41
5080													
	55		2	50/2"		13				Becomes yellowish brown			% Fines = 49 % Gravel = 8
			8	50/4"		14	▼						
5075													
	60								CH				
5070													
	65		18	33		15				Light grayish brown fat clay with sand (hard, wet to moist)			LL = 57 PI = 18
5065									CL				
	70		6	50/5"		16				Grayish brown lean clay (hard, dry)			LL = 46 PI = 81
5060													New boring (B-4A) located 9' east of B-4. Conditions appear similar to B-4 based on cuttings.
	75		18	90		1				Becomes brown with white sandy clay layers			

Note: See Figure A-1 for explanation of symbols.

DRAFT

Log of B-4 & B-4A (continued)

GeoEngineers

Project: Eagle Crest Landslide
Project Location: North Salt Lake, Utah
Project Number: 16265-002-09

Figure A-3
Sheet 2 of 3

Portland: Date:8/29/14 Path:\\SGF\PROJECTS\16\16265002\09\GINT\NORTH SALT LAKE LANDSLIDE.GPJ DBTemplate\LibTemplate\GEOENGINEERS8.GDT/GEI8_GEOTECH_STANDARD

Elevation (feet)	Depth (feet)	Interval	Recovered (in)	Blows/foot	Collected Sample	Sample Name	Water Level	Graphic Log	Group Classification	MATERIAL DESCRIPTION	Moisture Content, %	Dry Density, (pcf)	REMARKS
5055									CL	Brown clay with white sandy clay layers (hard, dry)			
	80		18	62		2				Becomes moist and light greenish gray with sand			
5050													
	85		5	50/5"		3				Becomes wet with coarse sand			LL = 43 PI = 15
5045													
	90		5	50/4"		4				Becomes dry			
5040													
	95		18	44		5				Becomes moist			
5035													
	100		18	48		6				With no sand			LL = 94 PI = 71
5030													
	105		4	50/4"		7			Siltstone	SILTSTONE, Reddish Brown and gray, slightly weathered, medium hard, closely jointed, with occasional sand layers			
5025													
	110		60			8							
5020													
	115												

Note: See Figure A-1 for explanation of symbols.

DRAFT

Log of B-4 & B-4A (continued)

GeoEngineers

Project: Eagle Crest Landslide
Project Location: North Salt Lake, Utah
Project Number: 16265-002-09

Figure A-3
Sheet 3 of 3

Portland: Date:8/29/14 Path:\\SGF\PROJECTS\16\16265002\09\GINT\NORTH SALT LAKE LANDSLIDE.GPJ DBTemplate/LibTemplate:GEOENGINEERS9.GDT/GEI8_GEOTECH_STANDARD

Drilled	Start 8/7/2014	End 8/7/2014	Total Depth (ft)	54	Logged By / Checked By	MCK / TNH	Driller	Earthcore Drilling, Inc.	Drilling Method	ODEX
Surface Elevation (ft) Vertical Datum	5149.6		Hammer Data	140 (lbs) / 30 (in) Drop	Drilling Equipment	Mobile B-80 Truck Mounted				
Latitude / Longitude	1529058.110 / 3460487.495		System Datum	Geographic / Utah State Plane North	Groundwater	Date Measured	Depth to Water (ft)	Elevation (ft)		
Notes: Upon completion, borehole backfilled with bentonite chips							Not encountered	N/A		

Elevation (feet)	Depth (feet)	Interval	Recovered (in)	Blows/foot	Collected Sample	Sample Name	Water Level	Graphic Log	Group Classification	MATERIAL DESCRIPTION	Moisture Content, %	Dry Density, (pcf)	REMARKS
	0								SM				
			10	56		1				Light brown silty fine sand with gravel (medium dense, dry)			
5145									ML				
	5		14	44		2				Light brown sandy silt with trace gravel (very stiff, dry)			
			16	42		3					9		% Fines = 58
5140									SM				
	10		16	32		4				Light brown and white silty fine sand (medium dense, moist)			
5135													
	15		16	24		5				Becomes light brown and loose	8		% Fines = 31
5130													
	20		18	29		6					7		% Fines =26
5125													
	25		18	62		7				Becomes dense with gravel and trace silt			
									GW-GM				
5120													
	30		18	62		8				Light brown and gray well graded gravel with silt and sand (medium dense, dry)	2		% Fines = 9 % Gravel = 57
									GP-GM				
5115	35												

Note: See Figure A-1 for explanation of symbols.

DRAFT

Portland: Date:8/29/14 Path:\\SGF\PROJECTS\16\16265002\09\GINT\NORTH SALT LAKE LANDSLIDE.GPJ DBTemplate\LibTemplate\GEOENGINEERS8.GDT\GEI8_GEOTECH_STANDARD

Log of B-6

GEOENGINEERS

Project: Eagle Crest Landslide
Project Location: North Salt Lake, Utah
Project Number: 16265-002-09

Figure A-4
Sheet 1 of 2

Elevation (feet)	Depth (feet)	FIELD DATA: Interval	Recovered (in)	Blows/foot	Collected Sample	Sample Name	Water Level	Graphic Log	Group Classification	MATERIAL DESCRIPTION	Moisture Content, %	Dry Density, (pcf)	REMARKS
	35		18	62		9			GP-GM	Light brown and gray poorly graded gravel with silt and sand (very dense, moist)	3		% Fines = 10 % Gravel = 71
5110	40		7	80		10				Becomes dense			
5105	45		8	49		11			GP	Light brown and gray poorly graded gravel with sand (medium dense, dry)			
5100	50		3	13		12				Becomes loose, no sand			

DRAFT

Note: See Figure A-1 for explanation of symbols.

Log of B-6 (continued)

GEOENGINEERS

Project: Eagle Crest Landslide
Project Location: North Salt Lake, Utah
Project Number: 16265-002-09

Figure A-4
Sheet 2 of 2

Portland: Date:8/29/14 Path:\\SGF\PROJECTS\16\16265002\09\GINT\NORTH SALT LAKE LANDSLIDE.GPJ DBTemplate\LibTemplate\GEOENGINEERS8.GDT/GEI8_GEOTECH_STANDARD

Drilled	Start 8/7/2014	End	Total Depth (ft)	110	Logged By / Checked By	MCK / TNH	Driller	Earthcore Drilling, Inc.	Drilling Method	ODEX/Rock Core
Surface Elevation (ft) Vertical Datum	5142.8		Hammer Data	140 (lbs) / 30 (in) Drop	Drilling Equipment	Mobile B-80 Truck Mounted				
Latitude / Longitude	1528940.201 / 3460640.560		System Datum	Geographic / Utah State Plane North	Groundwater	Date Measured: 8/22/2014	Depth to Water (ft): 68.9	Elevation (ft): 5073.9		

Notes: Upon completion, borehole backfilled with cement-bentonite grout.

Elevation (feet)	Depth (feet)	Interval	Recovered (in)	Blows/foot	Collected Sample	Sample Name	Water Level	Graphic Log	Group Classification	MATERIAL DESCRIPTION	Moisture Content, %	Dry Density, (pcf)	REMARKS
	0								SP				
5140			18	40		1				Brown medium to coarse sand with gravel (medium dense, moist)			
	5		18	36		2			ML	Light brown sandy silt with occasional gravel (very stiff, moist)			
5135			16	47		3							
	10		14	64		4							
5130													
	15		16	36		5				With trace gravel	9		% Fines = 62 % Gravel = 1
5125									SM				
	20		16	34		6				Light brown and gray silty fine sand with clay and some gravel (medium dense, moist)			
5120													
	25		18	36		7					10		% Fines = 27 % Gravel = 6
5115									GP-GM				
	30		15	101		8				Light brown and gray poorly graded gravel with silt and sand (dense, moist)			
5110													
	35								GW-GM				

Note: See Figure A-1 for explanation of symbols.

DRAFT

Log of B-8

GeoEngineers

Project: Eagle Crest Landslide
Project Location: North Salt Lake, Utah
Project Number: 16265-002-09

Figure A-5
Sheet 1 of 3

Portland: Date:8/29/14 Path:\\SGF\PROJECTS\16\16265002\09\GINT\NORTH SALT LAKE LANDSLIDE.GPJ DBTemplate/LibTemplate/GEOENGINEERS8.GDT/GEI8_GEOTECH_STANDARD

Elevation (feet)	Depth (feet)	Interval	Recovered (in)	Blows/foot	Collected Sample	Sample Name	Water Level	Graphic Log	Group Classification	MATERIAL DESCRIPTION	Moisture Content, %	Dry Density, (pcf)	REMARKS
	35		18	80		9			GW-GM	Light brown well graded gravel with silt and ssand (dense, slightly moist)	2		% Fines = 8 % Gravel = 58
5105													
	40		5	23		10				Becomes loose			
5100													
									GP				
	45		6	70		11				Light brown and gray poorly graded gravel with sand (medium dense, dry)			
5095													
									GW-GM				
	50		10	63		12				Light brown and gray well graded gravel with silt and sand (medium dense, moist)			
5090													
	55		15	120/5"		13					3		% Fines = 13 % Gravel = 62
5085													
	60		11	120/5"		14				Becomes dark gray			
5080													
			4			15				Gray boulders, cobbles and gravel			
	65		18	41		16							
5075													
			48			R1				Large boulder (quartzite)			
	70												
5070			30			R2							
	75		18	24		17			CH	Brown fat clay with occasional sand (stiff, moist)	24	101.4	LL = 56 PI = 39

Note: See Figure A-1 for explanation of symbols.

DRAFT

Portland: Date:8/29/14 Path:\\SGF\PROJECTS\16\16265002\09\GINT\NORTH SALT LAKE LANDSLIDE.GPJ DBTemplate/LibTemplate/GEOENGINEERS8.GDT/GEI8_GEOTECH_STANDARD

Log of B-8 (continued)

GEOENGINEERS

Project: Eagle Crest Landslide
Project Location: North Salt Lake, Utah
Project Number: 16265-002-09

Figure A-5
Sheet 2 of 3

Elevation (feet)	Depth (feet)	Interval	Recovered (in)	Blows/foot	Collected Sample	Sample Name	Water Level	Graphic Log	Group Classification	MATERIAL DESCRIPTION	Moisture Content, %	Dry Density, (pcf)	REMARKS
5065									CH	Brown fat clay with occasional sand (stiff, moist)			
	80		10	90		18				Becomes hard and reddish brown with sand			
5060									CH				
	85		12	114		19				Mottled red and white gravelly fat clay (hard, wet)	15	109.8	Groundwater encountered, subsequent groundwater measurements indicate artesian
5055			18	107		20				With coarse sand and fine gravel	21	103.1	
	90		18	61		21			CL	Reddish brown lean clay (hard, wet)	28	87	LL = 38 PI = 23
5050													
	95		18	77		22							
5045									CH				
	100		5	120/5"		23				Red and white fat clay with gravel (hard, wet)			
5040													
	105		18	57		24				Becomes red and dry with occasional sand			
5035													
	110												

Note: See Figure A-1 for explanation of symbols.

DRAFT

Log of B-8 (continued)

GeoEngineers

Project: Eagle Crest Landslide
Project Location: North Salt Lake, Utah
Project Number: 16265-002-09

Figure A-5
Sheet 3 of 3

Portland: Date:8/29/14 Path:\\SGF\PROJECTS\16\16265002\09\GINT\NORTH SALT LAKE LANDSLIDE.GPJ DBTemplate\LibTemplate\GEOENGINEERS8.GDT/GEI8_GEOTECH_STANDARD

Drilled	Start 8/20/2014	End 8/20/2014	Total Depth (ft) 120	Logged By MCK / Checked By TNH	Driller Earthcore Drilling, Inc.	Drilling Method HSA/Rock Core
Surface Elevation (ft) Vertical Datum	5145.0		Hammer Data	140 (lbs) / 30 (in) Drop	Drilling Equipment	Mobile BK-81 Truck Mounted
Latitude 1528896.018 Longitude 3460445.613			System Datum	Geographic Utah State Plane North	Groundwater Date Measured	Depth to Water (ft) / Elevation (ft): Not encountered / N/A

Notes: Installed inclinometer upon completion.

Elevation (feet)	Depth (feet)	Interval	Recovered (in)	Blows/foot	Collected Sample	Sample Name	Water Level	Graphic Log	Group Classification	MATERIAL DESCRIPTION	Moisture Content, %	Dry Density, (pcf)	REMARKS
	0								SP				
5140	5												Top 10 feet of borehole removed with vacuum truck.
5135	10												
5130	15		15	12		S1				Light brown very fine sand with trace silt (medium dense, dry)			
									CL				
5125	20		13	27		S2				Sandy clay with trace gravel			% Fines = 51.0 % Gravel = 4.3
									CL				
5120	25		16	26		S3				Grayish brown lean clay (very stiff, slightly moist)			
5115	30		18	112		S4				Becomes hard and whitish gray with trace gravel			LL = 35 PI = 19
	35												

Note: See Figure A-1 for explanation of symbols.

DRAFT

Portland: Date:8/29/14 Path:\\SGF\PROJECTS\16\16265002\09\GINT\NORTH SALT LAKE LANDSLIDE.GPJ DBTemplate\LibTemplate\GEOENGINEERS8.GDT/GEI8_GEOTECH_STANDARD

Log of B-9

GEOENGINEERS

Project: Eagle Crest Landslide
Project Location: North Salt Lake, Utah
Project Number: 16265-002-09

Figure A-6
Sheet 1 of 4

Elevation (feet)	Depth (feet)	Interval	Recovered (in)	Blows/foot	Collected Sample	Sample Name	Water Level	Graphic Log	Group Classification	MATERIAL DESCRIPTION	Moisture Content, %	Dry Density, (pcf)	REMARKS
	35		10	41		S5			CL	Grayish brown lean clay with trace sand (hard, slightly moist)			
5105	40		18	156		S6				Becomes reddish brown with occasional sand			LL = 37 PI = 23
									ML				
5100	45		18	88		S7				Red silt with sand (very dense, dry)			
									CL				
5095	50		18	61		S8				Reddish brown lean clay with sand (hard, slightly moist)			
5090	55		18	57		S9				Becomes very stiff with trace sand			LL = 37 PI = 22
5085	60		16	82		S10				Becomes hard with trace black sand			
5080	65		15	112		S11							LL = 39 PI = 22
			18	110		S12				With sand			
5075	70			48		S13				Becomes very stiff and moist with sand and gravel (gravels are siltstone pieces)			Possible water table at 70' bgs
5070	75		16	55		S14				Becomes red with gray sandy clay and gravel			

Note: See Figure A-1 for explanation of symbols.

DRAFT

Portland: Date:8/29/14 Path:\\SGF\PROJECTS\16\16265002\09\GINT\NORTH SALT LAKE LANDSLIDE.GPJ DBTemplate\LibTemplate\GEOENGINEERS9.GDT/GEI8_GEOTECH_STANDARD

Log of B-9 (continued)

GeoEngineers

Project: Eagle Crest Landslide
Project Location: North Salt Lake, Utah
Project Number: 16265-002-09

Figure A-6
Sheet 2 of 4

Elevation (feet)	Depth (feet)	Interval	Recovered (in)	Blows/foot	Collected Sample	Sample Name	Water Level	Graphic Log	Group Classification	MATERIAL DESCRIPTION	Moisture Content, %	Dry Density, (pcf)	REMARKS
									CL	Red lean clay with gray sandy clay seams (very stiff, moist)			
									CH				
5065	80		9	150		S15				Red fat clay with coarse gravel (hard, moist) (transitioning to bedrock)			
5060	85		18	61		S16				Becomes very stiff and slightly moist with gray fat clay and sand (gravel is siltstone)			LL = 57 PI = 39
									CH				
5055	90		17	63		S17				Gray fat clay (hard, slightly moist) (siltstone weathered to clay)			LL = 81 PI =58
5050	95		18	58		S18				With sand and contains trace green clay			
5045	100		5	120/5.5"		S19				Becomes hard, dry and light grayish brown			LL = 57 PI = 34
5040	105		5.5	120/5.5"		S20							
5035	110		60			R1			Siltstone	SILTSTONE, Reddish Brown and gray, moderately to slightly weathered, medium hard, moderately closely jointed (interlayered with 3 slightly weaker claystone beds on top 3 feet)			
5030	115		60			R2							

Note: See Figure A-1 for explanation of symbols.

DRAFT

Portland: Date:8/29/14 Path:\\SGF\PROJECTS\16\16265002\09\GINT\NORTH SALT LAKE LANDSLIDE.GPJ DBTemplate\LibTemplate\GEOENGINEERS9.GDT/GEI8_GEOTECH_STANDARD

Log of B-9 (continued)

GEOENGINEERS

Project: Eagle Crest Landslide
Project Location: North Salt Lake, Utah
Project Number: 16265-002-09

Figure A-6
Sheet 3 of 4

Elevation (feet)	Depth (feet)	FIELD DATA: Interval	Recovered (in)	Blows/foot	Collected Sample	Sample Name	Water Level	Graphic Log	Group Classification	MATERIAL DESCRIPTION	Moisture Content, %	Dry Density, (pcf)	REMARKS
	120									SILTSTONE, Reddish Brown and gray, moderately to slightly weathered, medium hard, moderately closely jointed (interlayered with 3 slightly weaker claystone beds on top 3 feet)			

DRAFT

Note: See Figure A-1 for explanation of symbols.

Log of B-9 (continued)

GeoEngineers

Project: Eagle Crest Landslide
Project Location: North Salt Lake, Utah
Project Number: 16265-002-09

Figure A-6
Sheet 4 of 4

Portland: Date:8/29/14 Path:\\SGF\PROJECTS\16\16265002\09\GINT\NORTH SALT LAKE LANDSLIDE.GPJ DBTemplate\LibTemplate\GEOENGINEERS8.GDT\GEI8_GEOTECH_STANDARD

Drilled	Start 8/15/2014	End 8/15/2014	Total Depth (ft)	50	Logged By / Checked By	MCK / TNH	Driller	Earthcore Drilling, Inc.	Drilling Method	ODEX

Hammer Data		Drilling Equipment	Mobile B-80 Truck Mounted
Surface Elevation (ft) Vertical Datum	5128.7	Top of Casing Elevation (ft)	
Latitude Longitude	1528690.951 3460631.563	System Datum	Geographic Utah State Plane North

A 2 (in) well was installed on 8/15/2014 to a depth of 50 (ft).

Groundwater Date Measured	Depth to Water (ft)	Elevation (ft)
		N/A

Notes:

Elevation (feet)	Depth (feet)	FIELD DATA: Interval Recovered (in)	Blows/foot	Collected Sample	Sample Name	Water Level	Graphic Log	Group Classification	MATERIAL DESCRIPTION	Water Content, %	Dry Density, (psf)
	0							SP/GP	Light brown and gray sand and gravel		
5125											
	5										
5120											
	10										
5115											
	15										
5110											
	20										
5105											
	25										
5100											
	30										
5095											
	35										

WELL LOG

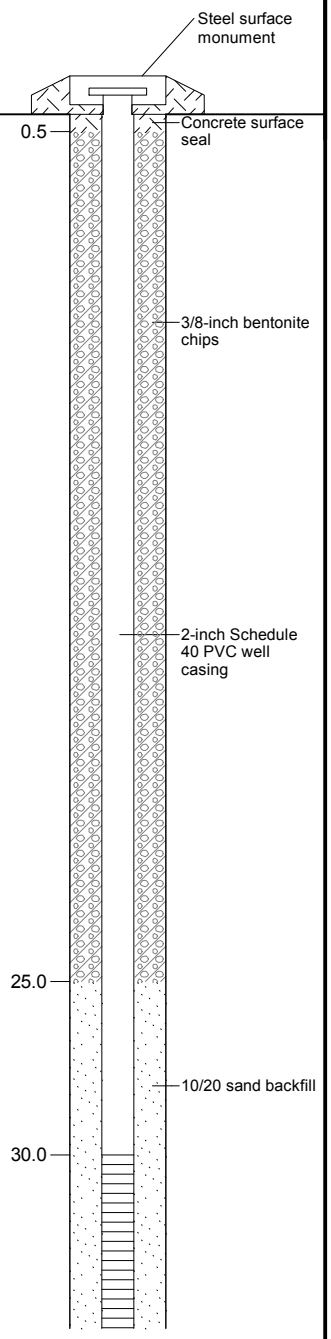

Note: See Figure A-1 for explanation of symbols.

DRAFT

Log of P-1

GeoEngineers

Project: Eagle Crest Landslide
Project Location: North Salt Lake, Utah
Project Number: 16265-002-09

Figure A-7
Sheet 1 of 2

Portland: Date:8/29/14 Path:\\SGF\PROJECTS\16\16265002\09\GINT\NORTH SALT LAKE LANDSLIDE.GPJ DBTemplate\LibTemplate\GEOENGINEERS9.GDT/GEI8_GEOTECH_WELL

Elevation (feet)	Depth (feet)	FIELD DATA: Interval Recovered (in)	Blows/foot	Collected Sample	Sample Name	Water Level	Graphic Log	Group Classification	MATERIAL DESCRIPTION	Water Content, %	Dry Density, (psf)	WELL LOG
	35							SP/GP	Light brown and gray sand and gravel			
5090												
	40											2-inch Schedule 40 PVC screen, 0.010-inch slot width
5085												
	45											
								CL	Red fat clay			
5080												
	50											50.0

Note: See Figure A-1 for explanation of symbols.

DRAFT

Log of P-1 (continued)

GeoEngineers

Project: Eagle Crest Landslide
Project Location: North Salt Lake, Utah
Project Number: 16265-002-09

Figure A-7
Sheet 2 of 2

Portland: Date:8/29/14 Path:\\SGF\PROJECTS\16\16265002\09\GINT\NORTH SALT LAKE LANDSLIDE.GPJ DBTemplate\LibTemplate\GEOENGINEERS8.GDT/GEI8_GEOTECH_WELL

Drilled Start 8/15/2014 End 8/15/2014	Total Depth (ft) 51	Logged By MCK Checked By TNH	Driller Earthcore Drilling, Inc.	Drilling Method ODEX
Hammer Data		Drilling Equipment	Mobile B-80 Truck Mounted	A 2 (in) well was installed on 8/15/2014 to a depth of 51 (ft).
Surface Elevation (ft) Vertical Datum	5145.0	Top of Casing Elevation (ft)		Groundwater: Date Measured / Depth to Water (ft) / Elevation (ft) N/A
Latitude 1528872.726 Longitude 3460518.899		System Datum	Geographic Utah State Plane North	

Notes:

Elevation (feet)	Depth (feet)	Interval	Recovered (in)	Blows/foot	Collected Sample	Sample Name	Water Level	Graphic Log	Group Classification	MATERIAL DESCRIPTION	Water Content, %	Dry Density, (psf)
	0								SP/GP	Light brown and gray sand and gravel		
5140	5											
5135	10											
5130	15											
5125	20											
5120	25											
5115	30											
	35											

WELL LOG

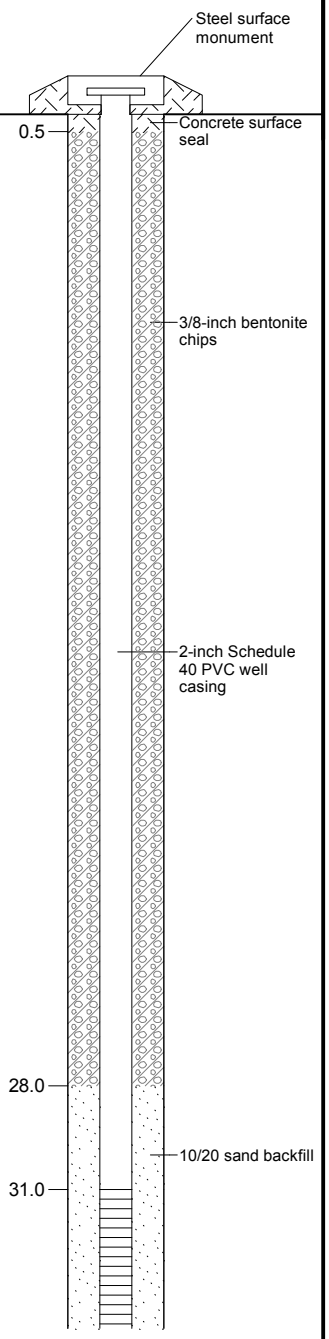

DRAFT

Note: See Figure A-1 for explanation of symbols.

Log of P-2

GEOENGINEERS

Project: Eagle Crest Landslide
Project Location: North Salt Lake, Utah
Project Number: 16265-002-09

Figure A-8
Sheet 1 of 2

Portland: Date:8/29/14 Path:\\SGF\PROJECTS\16\16265002\09\GINT\NORTH SALT LAKE LANDSLIDE.GPJ DBTemplate\LibTemplate\GEOENGINEERS8.GDT/GEI8_GEOTECH_WELL

Elevation (feet)	Depth (feet)	FIELD DATA: Interval Recovered (in)	Blows/foot	Collected Sample	Sample Name	Water Level	Graphic Log	Group Classification	MATERIAL DESCRIPTION	Water Content, %	Dry Density, (psf)	WELL LOG
	35							SP/GP	Light brown and gray sand and gravel			
5105	40											2-inch Schedule 40 PVC screen, 0.010-inch slot width
5100	45											
								CL	Red and gray fat clay			
5095	50											51.0

Note: See Figure A-1 for explanation of symbols.

DRAFT

Log of P-2 (continued)

GeoEngineers

Project: Eagle Crest Landslide
Project Location: North Salt Lake, Utah
Project Number: 16265-002-09

Figure A-8
Sheet 2 of 2

Portland: Date:8/29/14 Path:\\SGF\PROJECTS\16\16265002\09\GINT\NORTH SALT LAKE LANDSLIDE.GPJ DBTemplate\LibTemplate\GEOENGINEERS8.GDT/GEI8_GEOTECH_WELL

Boring No.	Sample Depth (feet)	USCS Soil Classification	Natural Moisture Content (%)	Gradation			Atterberg		Residual Shear	
				Gravel (%)	Sand (%)	Fines (%)	LL	PI	Friction Angle (°)	Cohesion (psf)
B-1	8.0	GP-GM	1.6	69.9	50.0	7.7	NP	NP		
B-1	13.0	GP-GM	2.4	72.5	50.0	6.5	NP	NP		
B-1	18.0	GP-GM	1.6	71.1	50.0	11.6	NP	NP		
B-1	25.0	CL	15.5	4.0	101.6	19.3	35	19		
B-1	32.0	GC	12.5	52.3	37.5	21.4	33	20		
B-1	37.0	CH	18.4	0.0	4.8	84.7	57	40		
B-1	39.0	SC	13.9	0.0	4.8	47.0	47	30		
B-1	43.0	CL	11.2	0.1	9.5	56.7	31	15		
B-1	46.0	CH	18.2	1.2	12.5	62.1	53	39		
B-1	48.0	CH	20.2	0.0	4.8	81.1	54	37		
B-1	50.0	CH	34.7	22.8	37.5	51.9	83	46		
B-1	52.0	CL	18.3	0.0	4.8	83.2	40	27		
B-1	56.0	CL	16.9	10.3	37.5	59.7	44	31		
B-1	58.0	CH	33.4	0.0	4.8	83.4	77	58		
B-1	63.0	CH		0.1	9.5	72.8	53	31	16	410
B-1	65.0	CH	26.4	0.9	9.5	75.5	53	39		
B-1	68.0	CL	6	4.8	9.5	51.8	35	25		
B-1	71.0	CL	15.7	0.0	2.0	85.9	49	36		
B-1	76.0	CL	9.9	0.5	9.5	73.3	35	24		
B-1	78.0	SC	8.4	13.7	19.0	48.7	34	22		
B-1	82.0	CL	8.9	0.2	9.5	61.3	35	20		
B-1	85.0	CL	9.2	0.0	2.4	58.3	44	31		
B-2	14.0	GP-GM	1.4	86.2	50.0	9.0	NP	NP		
B-2	19.0	CL	18.8	0.7	12.5	78.2	42	29		
B-2	22.0	SC-SM	14.3	3.9	19.0	40.1	21	6		

Boring No.	Sample Depth (feet)	USCS Soil Classification	Natural Moisture Content (%)	Gradation			Atterberg		Residual Shear	
				Gravel (%)	Sand (%)	Fines (%)	LL	PI	Friction Angle (°)	Cohesion (psf)
B-2	24.0	CL	15.9	5.9	25.0	65.8	38	22		
B-2	28.0	CL	11.5	4.1	101.6	18.1	39	23		
B-2	31.0	CL	14.7	6.1	19.0	71.6	33	19		
B-2	34.0	CL	15.1	0.0	4.8	82.8	40	23		
B-2	36.0	CL	12.7	0.6	9.5	68.2	32	18		
B-2	38.0	GC	9.5	56.3	50.0	23.1	31	16		
B-2	41.0	CL-ML	13.9	16.1	37.5	50.3	27	7		
B-2	44.0	CL	13.5	0.0	4.8	59.4	36	18		
B-2	46.0	CL	12.1	21.5	37.5	53.0	44	31		
B-2	48.0	CL	12.5	0.1	9.5	65.0	49	32		
B-2	50.0	GC	7.3	56.7	50.0	19.6	31	16		
B-2	53.0	GC	14.9	33.9	50.0	47.0	42	27		
B-2	56.0	CL	14.5	1.4	12.5	69.8	38	24		
B-2	59.0	CL	14.7	6.7	25.0	64.6	40	21		
B-2	61.0	GC	9	36.5	37.5	34.1	33	17		
B-2	64.0	CH	12.3	14.7	37.5	56.3	50	32		
B-2	66.0	GC	12	42.9	37.5	40.8	49	32		
B-2	68.0	GC	8.9	55.0	50.0	20.2	31	16		
B-2	71.0	CL	15.1	15.0	37.5	68.8	48	31	18	405
B-2	74.0	CL	12.4	21.6	37.5	56.3	40	25		
B-2	76.0	CL	11.4	0.0	4.8	53.8	33	17		
B-2	79.0	CL	8.3	6.3	19.0	69.1	45	32		
B-2	80.0	CH	12.1	2.5	12.5	77.3	60	35		
B-2	83.0	CH	12.5	4.0	19.0	77.6	54	36		
B-2	85.0	CH	15.5	5.4	19.0	72.6	61	37		
B-2	87.0	CH	19.2	2.8	19.0	71.0	57	33		
B-2	88.0	CH	10.7	0.4	9.5	91.2	81	57		

GeoStrata

Copyright GeoStrata, 2014

Lab Summary Report

North Salt Lake City
Eagle Pointe Landslide
North Salt Lake, UT
Project Number: 920-004

Plate C - 1

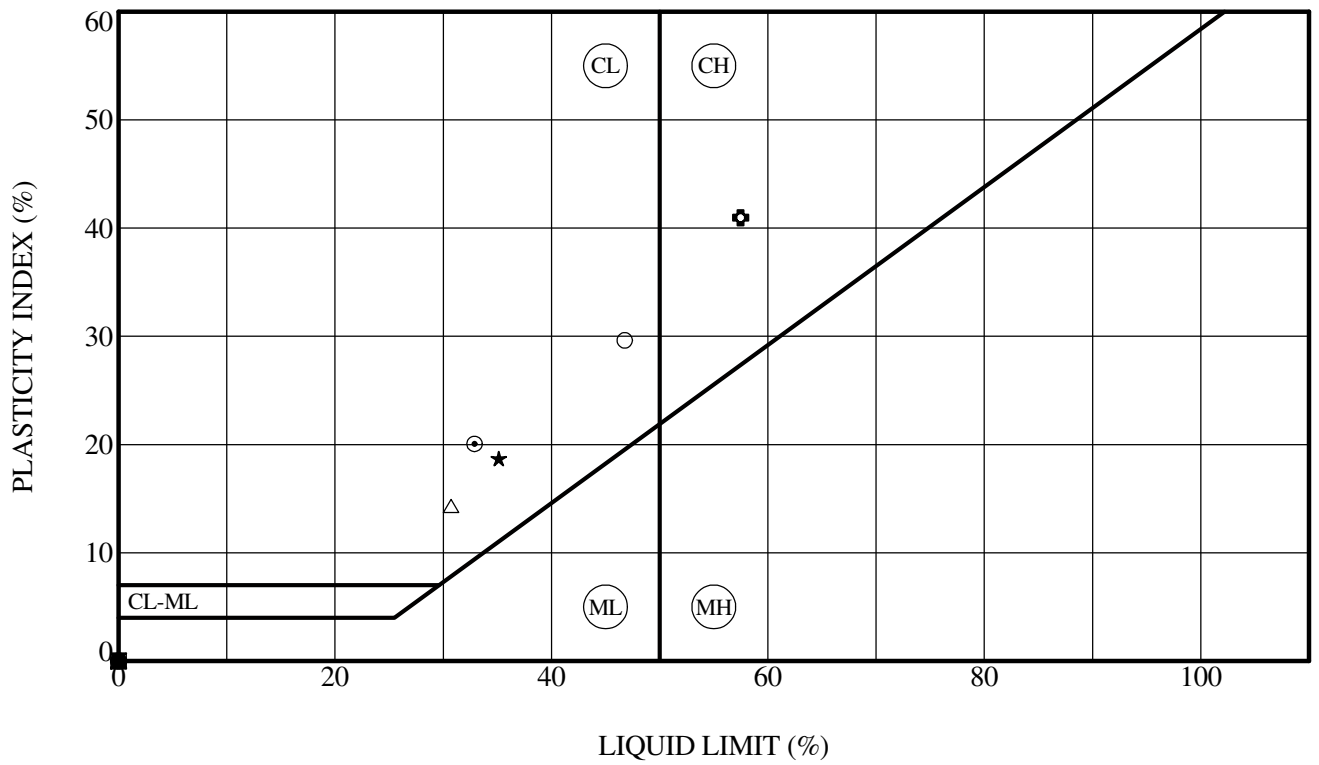

	Sample Location	Depth (ft)	LL (%)	PL (%)	PI (%)	Fines (%)	Classification
●	**B-1**	**8.0**	**NP**	**NP**	**NP**		**Poorly Graded GRAVEL with silt and sand**
⊠	**B-1**	**13.0**	**NP**	**NP**	**NP**		**Poorly Graded GRAVEL with silt and sand**
▲	**B-1**	**18.0**	**NP**	**NP**	**NP**		**Poorly Graded GRAVEL with silt and sand**
★	**B-1**	**25.0**	**35**	**16**	**19**		**Lean CLAY with sand**
⊙	**B-1**	**32.0**	**33**	**13**	**20**		**Clayey GRAVEL with sand**
✿	**B-1**	**37.0**	**57**	**17**	**40**		**Fat CLAY with sand**
○	**B-1**	**39.0**	**47**	**17**	**30**		**Clayey SAND**
△	**B-1**	**43.0**	**31**	**16**	**15**		**Sandy Lean CLAY**

GeoStrata

ATTERBERG LIMITS' RESULTS - ASTM D 4318

North Salt Lake City
Eagle Pointe Landslide
North Salt Lake, UT
Project Number: 920-004

Plate

C - 2

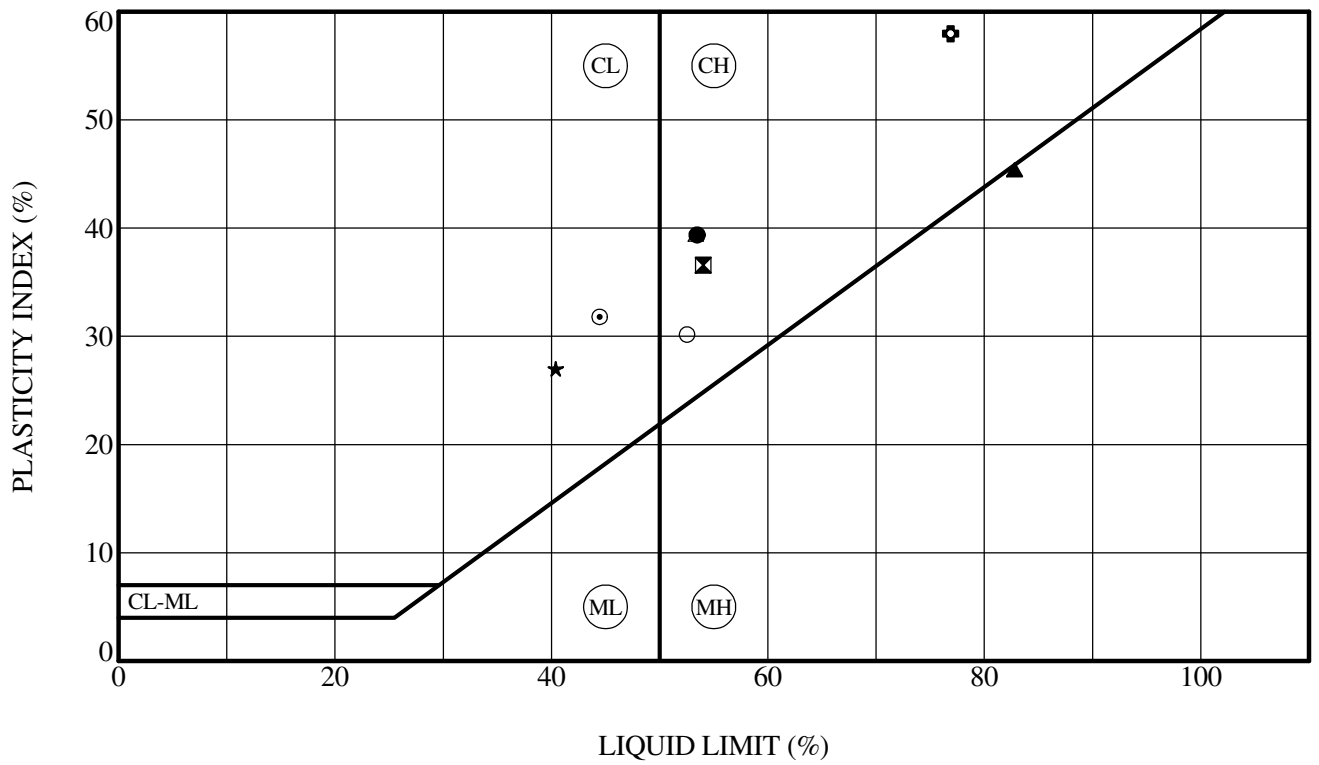

	Sample Location	Depth (ft)	LL (%)	PL (%)	PI (%)	Fines (%)	Classification
●	**B-1**	**46.0**	**53**	**14**	**39**		**Sandy Fat CLAY**
⊠	**B-1**	**48.0**	**54**	**17**	**37**		**Fat CLAY with sand**
▲	**B-1**	**50.0**	**83**	**37**	**46**		**Sandy Fat CLAY with gravel**
★	**B-1**	**52.0**	**40**	**13**	**27**		**Lean CLAY with sand**
⊙	**B-1**	**56.0**	**44**	**13**	**31**		**Sandy Lean CLAY**
✿	**B-1**	**58.0**	**77**	**19**	**58**		**Fat CLAY with sand**
○	**B-1**	**63.0**	**53**	**22**	**31**		**Fat CLAY with sand**
△	**B-1**	**65.0**	**53**	**14**	**39**		**Fat CLAY with sand**

GeoStrata

ATTERBERG LIMITS' RESULTS - ASTM D 4318

North Salt Lake City
Eagle Pointe Landslide
North Salt Lake, UT
Project Number: 920-004

Plate

C - 3

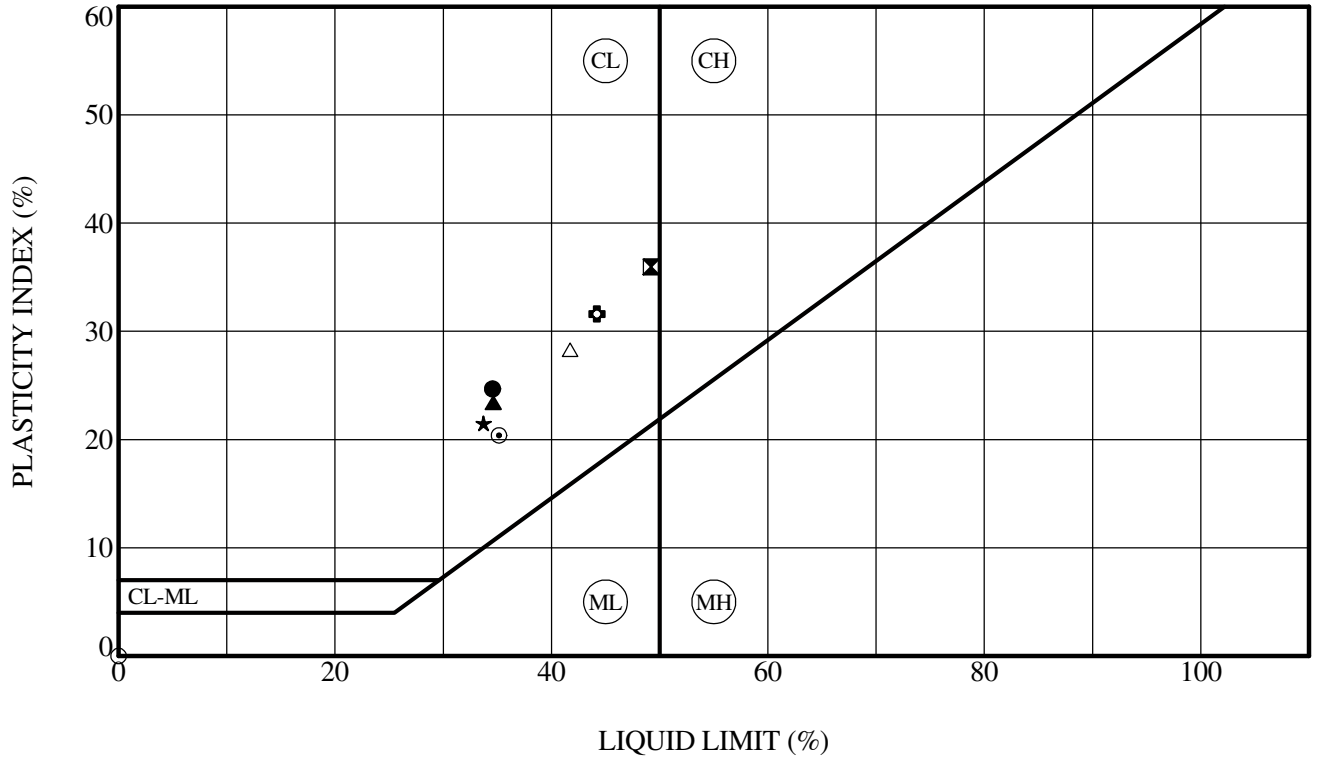

	Sample Location	Depth (ft)	LL (%)	PL (%)	PI (%)	Fines (%)	Classification
●	**B-1**	**68.0**	**35**	**10**	**25**		**Sandy Lean CLAY**
⊠	**B-1**	**71.0**	**49**	**13**	**36**		**Lean CLAY**
▲	**B-1**	**76.0**	**35**	**11**	**24**		**Lean CLAY with sand**
★	**B-1**	**78.0**	**34**	**12**	**22**		**Clayey SAND**
⊙	**B-1**	**82.0**	**35**	**15**	**20**		**Sandy Lean CLAY**
✿	**B-1**	**85.0**	**44**	**13**	**31**		**Sandy Lean CLAY**
○	**B-2**	**14.0**	**NP**	**NP**	**NP**		**Poorly Graded GRAVEL with silt**
△	**B-2**	**19.0**	**42**	**13**	**29**		**Lean CLAY with sand**

GeoStrata

ATTERBERG LIMITS' RESULTS - ASTM D 4318

North Salt Lake City
Eagle Pointe Landslide
North Salt Lake, UT
Project Number: 920-004

Plate

C - 4

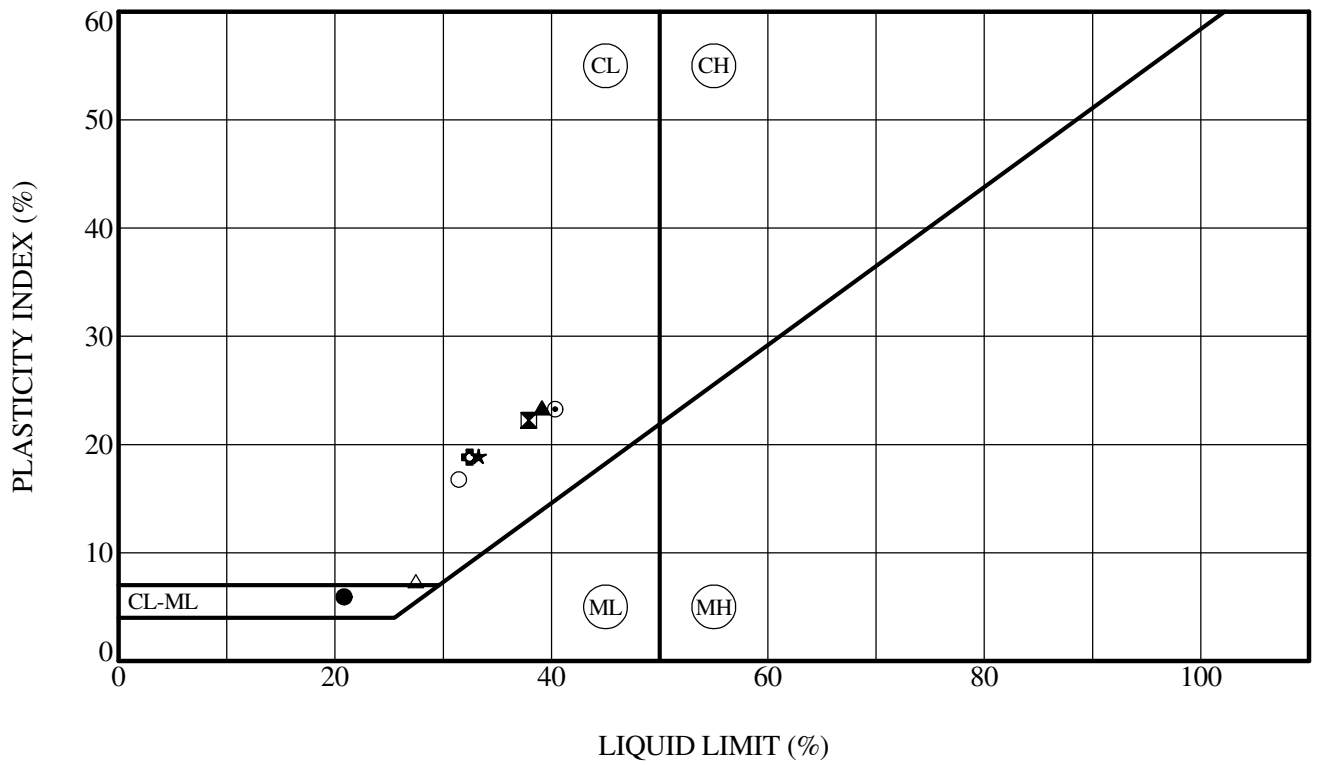

	Sample Location	Depth (ft)	LL (%)	PL (%)	PI (%)	Fines (%)	Classification
●	**B-2**	**22.0**	**21**	**15**	**6**		**Silty Clayey SAND**
⊠	**B-2**	**24.0**	**38**	**16**	**22**		**Sandy Lean CLAY**
▲	**B-2**	**28.0**	**39**	**16**	**23**		**Lean CLAY with sand**
★	**B-2**	**31.0**	**33**	**14**	**19**		**Lean CLAY with sand**
⊙	**B-2**	**34.0**	**40**	**17**	**23**		**Lean CLAY with sand**
✿	**B-2**	**36.0**	**32**	**14**	**18**		**Sandy Lean CLAY**
○	**B-2**	**38.0**	**31**	**15**	**16**		**Clayey GRAVEL with sand**
△	**B-2**	**41.0**	**27**	**20**	**7**		**Sandy Silty CLAY with gravel**

GeoStrata

ATTERBERG LIMITS' RESULTS - ASTM D 4318

North Salt Lake City
Eagle Pointe Landslide
North Salt Lake, UT
Project Number: 920-004

Plate

C - 5

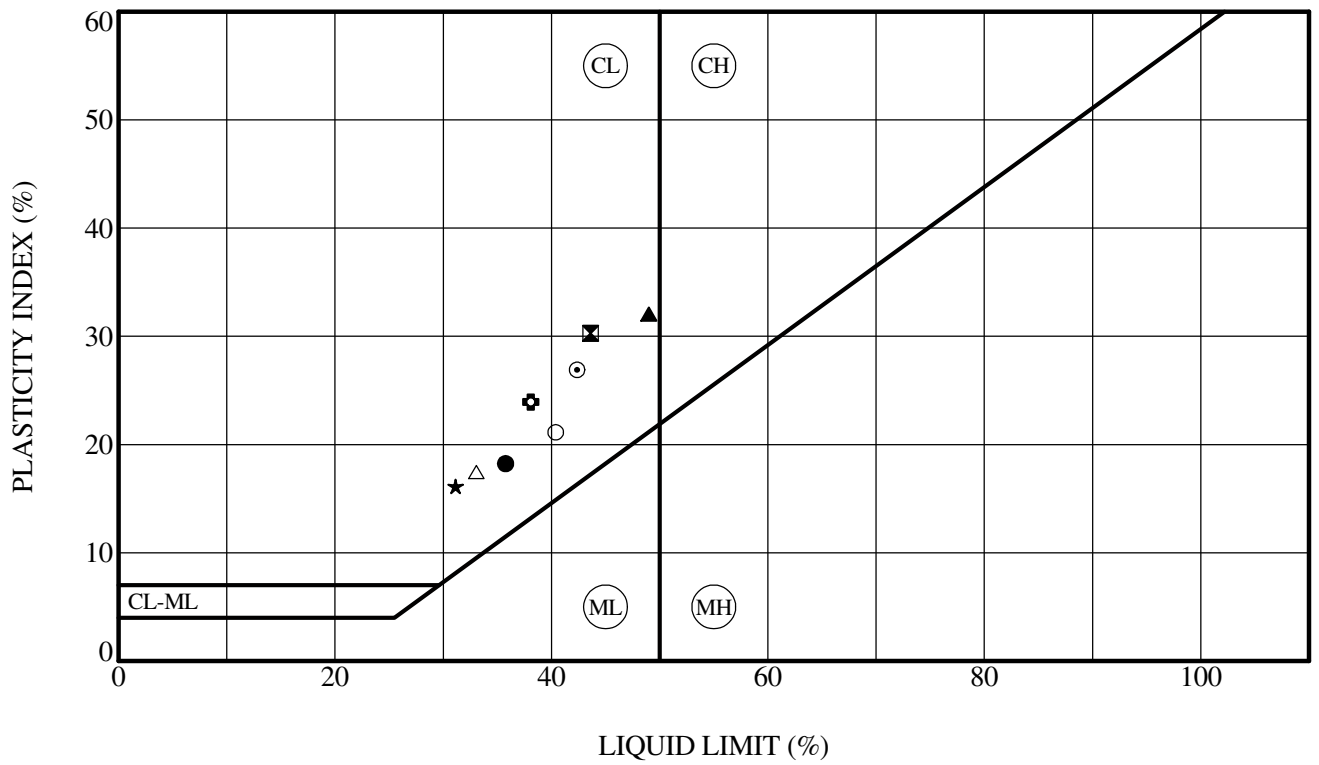

	Sample Location	Depth (ft)	LL (%)	PL (%)	PI (%)	Fines (%)	Classification
●	**B-2**	**44.0**	**36**	**18**	**18**		**Sandy Lean CLAY**
⊠	**B-2**	**46.0**	**44**	**13**	**31**		**Sandy Lean CLAY with gravel**
▲	**B-2**	**48.0**	**49**	**17**	**32**		**Sandy Lean CLAY**
★	**B-2**	**50.0**	**31**	**15**	**16**		**Clayey GRAVEL with sand**
⊙	**B-2**	**53.0**	**42**	**15**	**27**		**Clayey GRAVEL with sand**
✿	**B-2**	**56.0**	**38**	**14**	**24**		**Sandy Lean CLAY**
○	**B-2**	**59.0**	**40**	**19**	**21**		**Sandy Lean CLAY**
△	**B-2**	**61.0**	**33**	**16**	**17**		**Clayey GRAVEL with sand**

GeoStrata

ATTERBERG LIMITS' RESULTS - ASTM D 4318

North Salt Lake City
Eagle Pointe Landslide
North Salt Lake, UT
Project Number: 920-004

Plate

C - 6

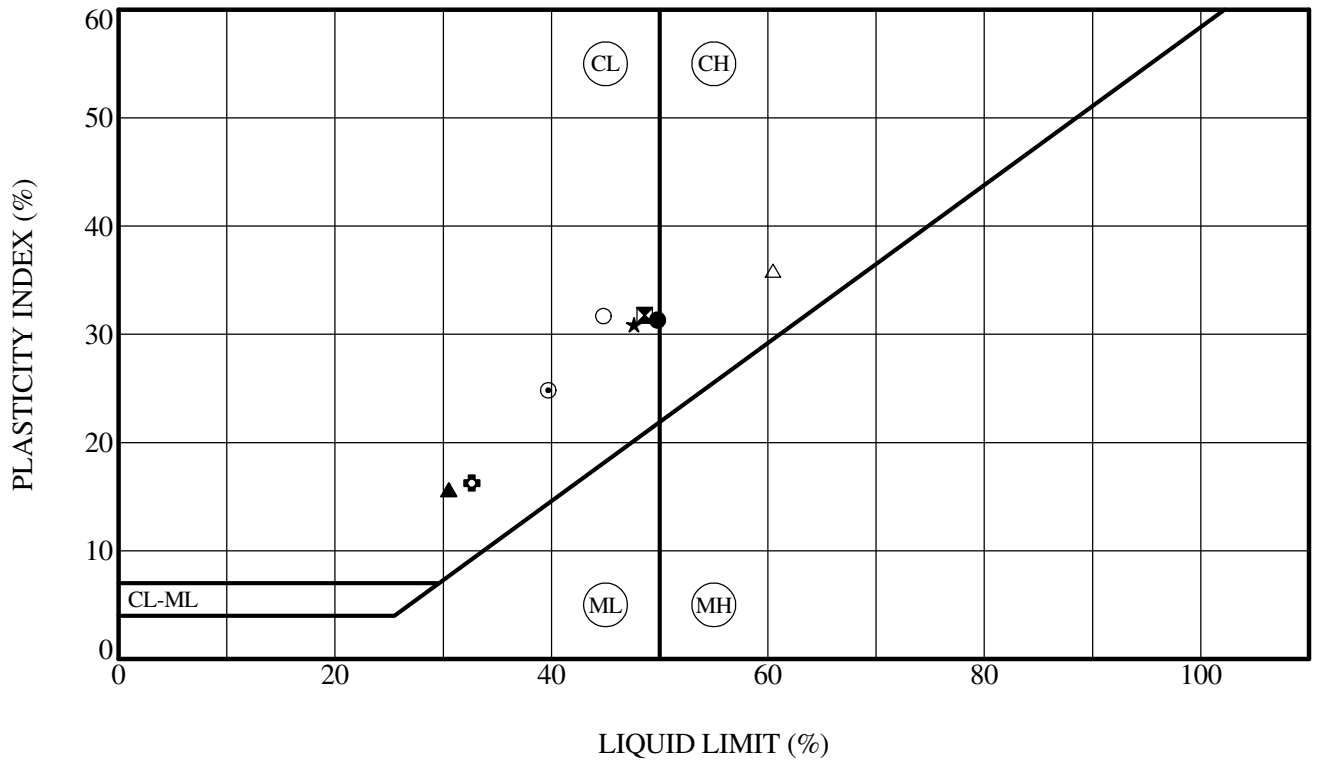

	Sample Location	Depth (ft)	LL (%)	PL (%)	PI (%)	Fines (%)	Classification
●	**B-2**	**64.0**	**50**	**18**	**32**		**Sandy Fat CLAY**
⊠	**B-2**	**66.0**	**49**	**17**	**32**		**Clayey GRAVEL with sand**
▲	**B-2**	**68.0**	**31**	**15**	**16**		**Clayey GRAVEL with sand**
★	**B-2**	**71.0**	**48**	**17**	**31**		**Sandy Lean CLAY with gravel**
⊙	**B-2**	**74.0**	**40**	**15**	**25**		**Sandy Lean CLAY with gravel**
✿	**B-2**	**76.0**	**33**	**16**	**17**		**Sandy Lean CLAY**
○	**B-2**	**79.0**	**45**	**13**	**32**		**Sandy Lean CLAY**
△	**B-2**	**80.0**	**60**	**25**	**35**		**Fat CLAY with sand**

GeoStrata

ATTERBERG LIMITS' RESULTS - ASTM D 4318

North Salt Lake City
Eagle Pointe Landslide
North Salt Lake, UT
Project Number: 920-004

Plate

C - 7

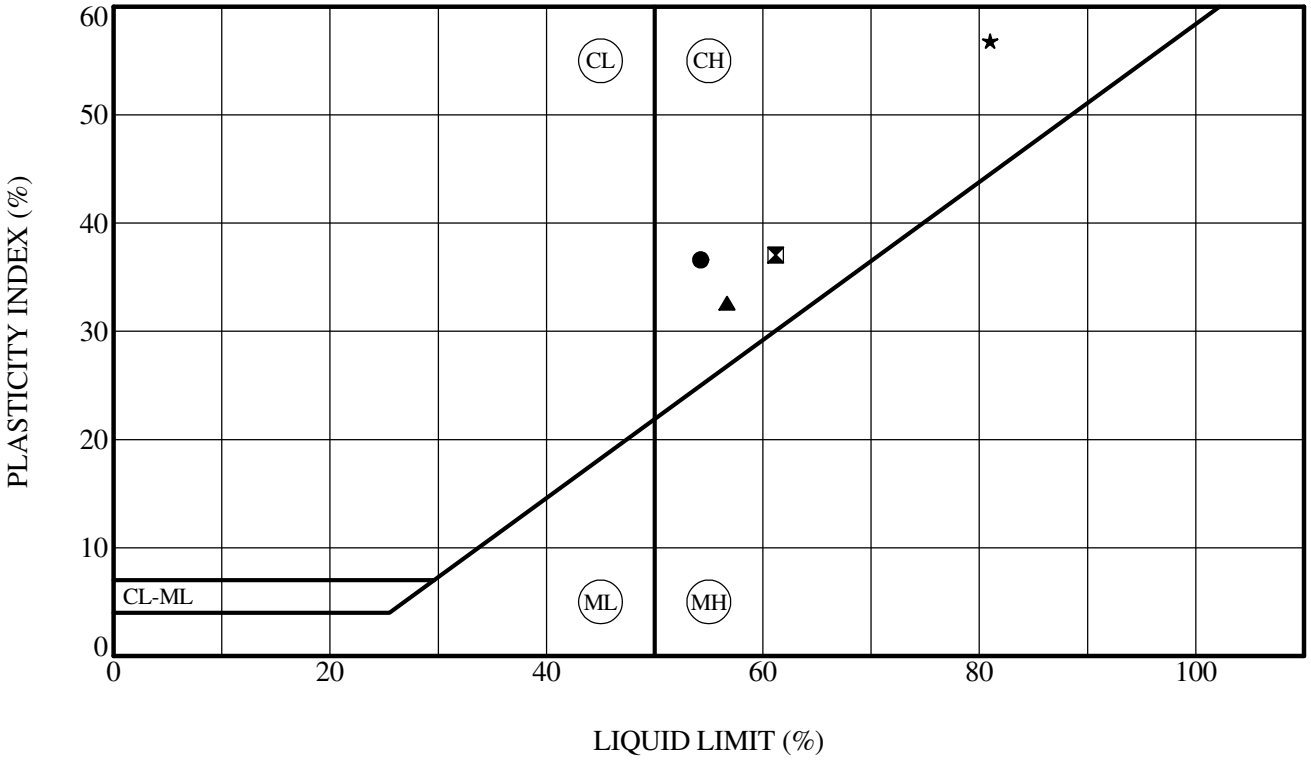

	Sample Location	Depth (ft)	LL (%)	PL (%)	PI (%)	Fines (%)	Classification
●	**B-2**	**83.0**	**54**	**18**	**36**		**Fat CLAY with sand**
⊠	**B-2**	**85.0**	**61**	**24**	**37**		**Fat CLAY with sand**
▲	**B-2**	**87.0**	**57**	**24**	**33**		**Fat CLAY with sand**
★	**B-2**	**88.0**	**81**	**24**	**57**		**Fat CLAY**

GeoStrata

ATTERBERG LIMITS' RESULTS - ASTM D 4318

North Salt Lake City
Eagle Pointe Landslide
North Salt Lake, UT
Project Number: 920-004

Plate

C - 8

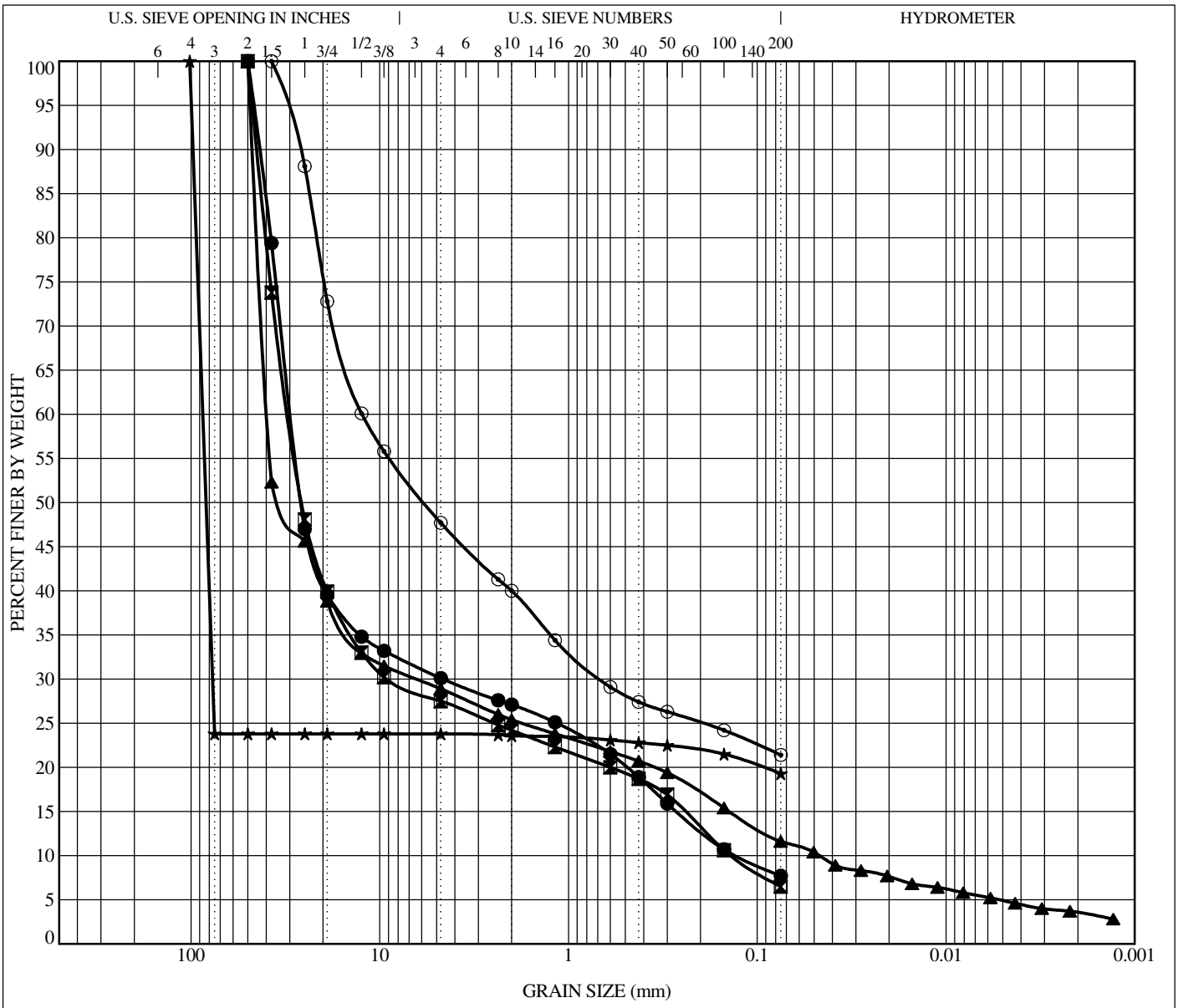

COBBLES	GRAVEL		SAND			SILT OR CLAY
	coarse	fine	coarse	medium	fine	

	Sample Location	Depth	Classification	LL	PL	PI	Cc	Cu
●	**B-1**	**8.0**	**Poorly Graded GRAVEL with silt and sand**	**NP**	**NP**	**NP**	**5.68**	**230.54**
⊠	**B-1**	**13.0**	**Poorly Graded GRAVEL with silt and sand**	**NP**	**NP**	**NP**	**19.92**	**222.56**
▲	**B-1**	**18.0**	**Poorly Graded GRAVEL with silt and sand**	**NP**	**NP**	**NP**	**22.06**	**839.32**
★	**B-1**	**25.0**	**Lean CLAY with sand**	**35**	**16**	**19**		
⊙	**B-1**	**32.0**	**Clayey GRAVEL with sand**	**33**	**13**	**20**		

	Sample Loctaion	Depth	D100	D60	D30	D10	%Gravel	%Sand	%Silt	%Clay
●	**B-1**	**8.0**	**50**	**29.417**	**4.619**	**0.128**	**69.9**	**22.4**	**7.7**	
⊠	**B-1**	**13.0**	**50**	**30.163**	**9.025**	**0.136**	**72.5**	**21.0**	**6.5**	
▲	**B-1**	**18.0**	**50**	**39.283**	**6.369**	**0.047**	**71.1**	**17.3**	**8.1**	**3.5**
★	**B-1**	**25.0**	**101.6**	**86.634**	**76.875**		**4.0**	**4.5**	**19.3**	
⊙	**B-1**	**32.0**	**37.5**	**12.42**	**0.673**		**52.3**	**26.3**	**21.4**	

GeoStrata

GRAIN SIZE DISTRIBUTION - ASTM D422

North Salt Lake City
Eagle Pointe Landslide
North Salt Lake, UT
Project Number: 920-004

Plate

C - 9

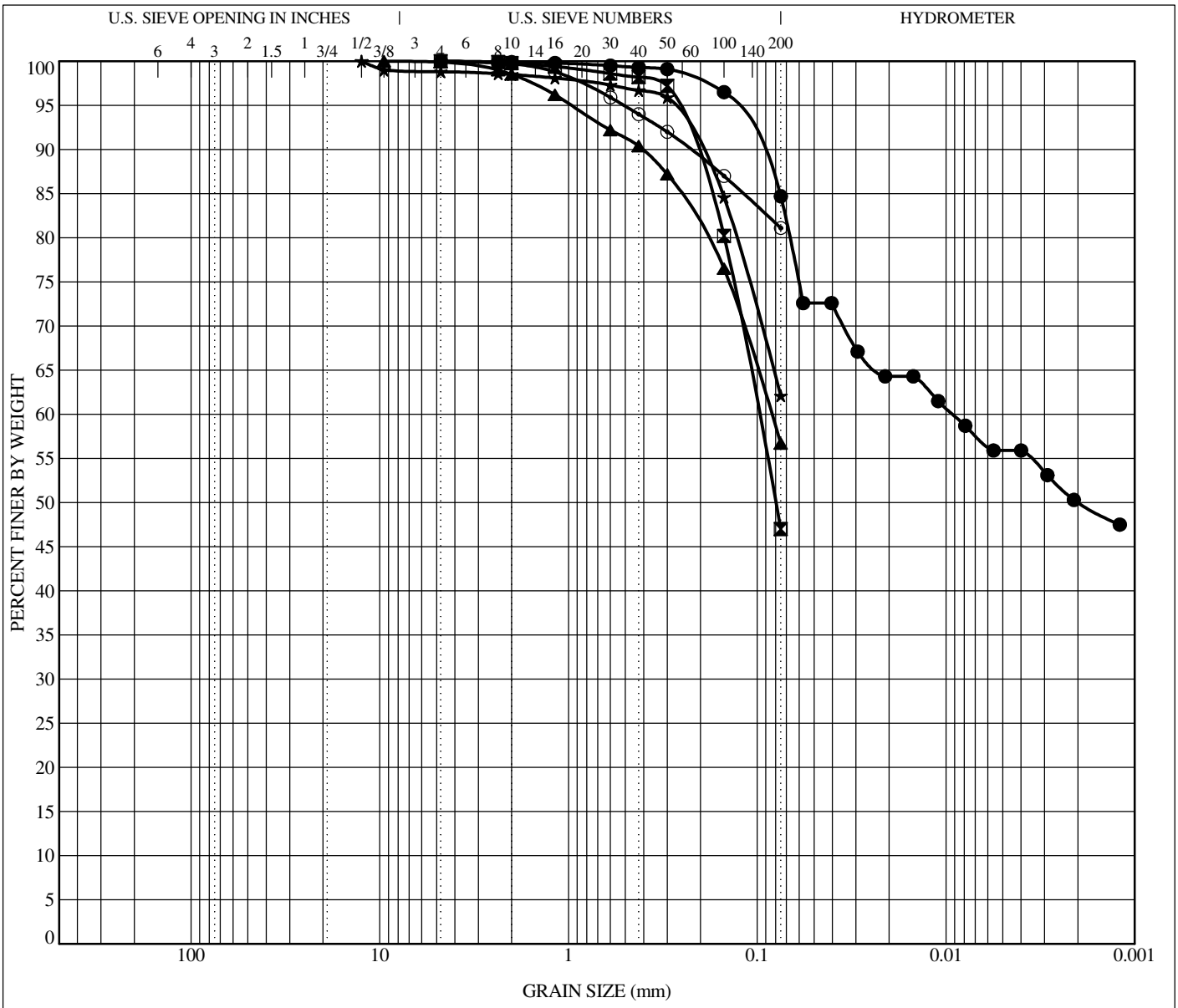

COBBLES	GRAVEL		SAND			SILT OR CLAY
	coarse	fine	coarse	medium	fine	

	Sample Location	Depth	Classification	LL	PL	PI	Cc	Cu
●	**B-1**	**37.0**	**Fat CLAY with sand**	**57**	**17**	**40**		
⊠	**B-1**	**39.0**	**Clayey SAND**	**47**	**17**	**30**		
▲	**B-1**	**43.0**	**Sandy Lean CLAY**	**31**	**16**	**15**		
★	**B-1**	**46.0**	**Sandy Fat CLAY**	**53**	**14**	**39**		
⊙	**B-1**	**48.0**	**Fat CLAY with sand**	**54**	**17**	**37**		

	Sample Loctaion	Depth	D100	D60	D30	D10	%Gravel	%Sand	%Silt	%Clay
●	**B-1**	**37.0**	**4.75**	**0.009**			**0.0**	**15.3**	**34.6**	**50.1**
⊠	**B-1**	**39.0**	**4.75**	**0.098**			**0.0**	**53.0**	**47.0**	
▲	**B-1**	**43.0**	**9.5**	**0.084**			**0.1**	**43.2**	**56.7**	
★	**B-1**	**46.0**	**12.5**				**1.2**	**36.7**	**62.1**	
⊙	**B-1**	**48.0**	**4.75**				**0.0**	**18.9**	**81.1**	

GeoStrata

GRAIN SIZE DISTRIBUTION - ASTM D422

North Salt Lake City
Eagle Pointe Landslide
North Salt Lake, UT
Project Number: 920-004

Plate

C - 10

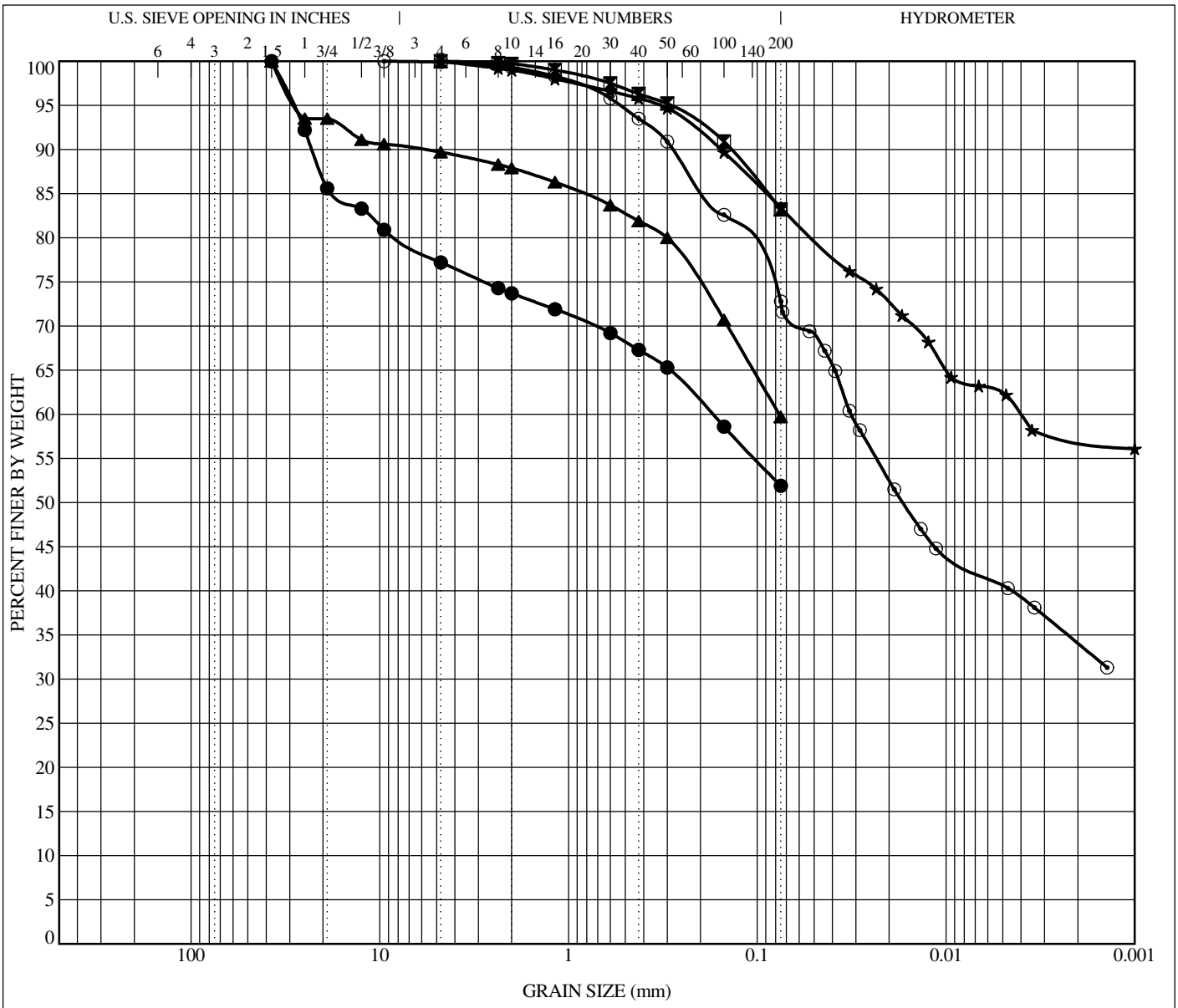

COBBLES	GRAVEL		SAND			SILT OR CLAY
	coarse	fine	coarse	medium	fine	

	Sample Location	Depth	Classification	LL	PL	PI	Cc	Cu
●	**B-1**	**50.0**	**Sandy Fat CLAY with gravel**	**83**	**37**	**46**		
⊠	**B-1**	**52.0**	**Lean CLAY with sand**	**40**	**13**	**27**		
▲	**B-1**	**56.0**	**Sandy Lean CLAY**	**44**	**13**	**31**		
★	**B-1**	**58.0**	**Fat CLAY with sand**	**77**	**19**	**58**		
⊙	**B-1**	**63.0**	**Fat CLAY with sand**	**53**	**22**	**31**		

	Sample Loctaion	Depth	D100	D60	D30	D10	%Gravel	%Sand	%Silt	%Clay
●	**B-1**	**50.0**	**37.5**	**0.173**			**22.8**	**25.3**	**51.9**	
⊠	**B-1**	**52.0**	**4.75**				**0.0**	**16.8**	**83.2**	
▲	**B-1**	**56.0**	**37.5**	**0.076**			**10.3**	**30.0**	**59.7**	
★	**B-1**	**58.0**	**4.75**	**0.004**			**0.0**	**16.6**	**26.1**	**57.3**
⊙	**B-1**	**63.0**	**9.5**	**0.032**			**0.1**	**27.1**	**38.8**	**34.0**

GeoStrata

GRAIN SIZE DISTRIBUTION - ASTM D422

North Salt Lake City
Eagle Pointe Landslide
North Salt Lake, UT
Project Number: 920-004

Plate

C - 11

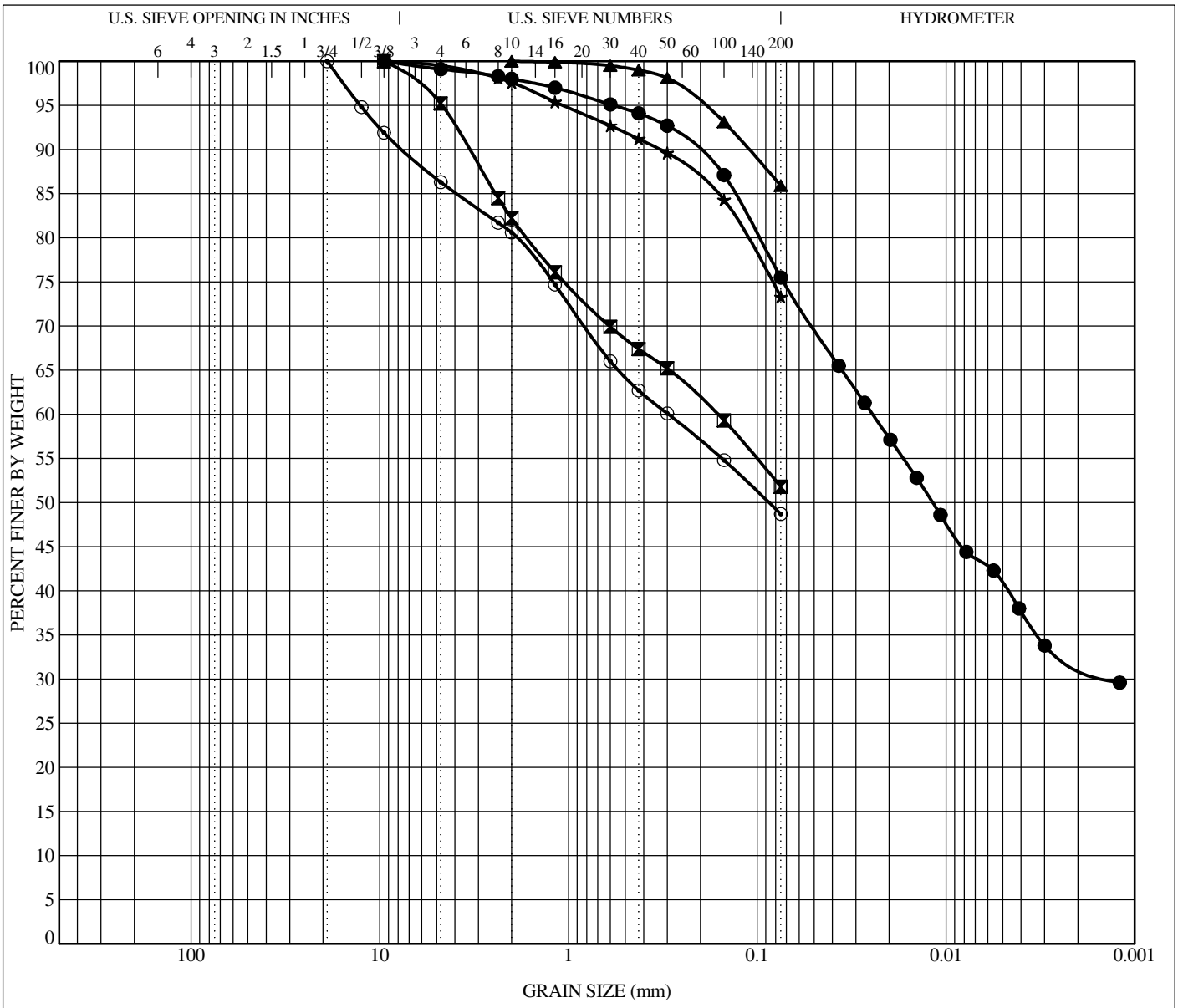

COBBLES	GRAVEL		SAND			SILT OR CLAY
	coarse	fine	coarse	medium	fine	

	Sample Location	Depth	Classification	LL	PL	PI	Cc	Cu
●	**B-1**	**65.0**	**Fat CLAY with sand**	**53**	**14**	**39**		
⊠	**B-1**	**68.0**	**Sandy Lean CLAY**	**35**	**10**	**25**		
▲	**B-1**	**71.0**	**Lean CLAY**	**49**	**13**	**36**		
★	**B-1**	**76.0**	**Lean CLAY with sand**	**35**	**11**	**24**		
⊙	**B-1**	**78.0**	**Clayey SAND**	**34**	**12**	**22**		

	Sample Loctaion	Depth	D100	D60	D30	D10	%Gravel	%Sand	%Silt	%Clay
●	**B-1**	**65.0**	**9.5**	**0.024**	**0.001**		**0.9**	**23.6**	**43.6**	**31.9**
⊠	**B-1**	**68.0**	**9.5**	**0.163**			**4.8**	**43.4**	**51.8**	
▲	**B-1**	**71.0**	**2**				**0.0**	**14.1**	**85.9**	
★	**B-1**	**76.0**	**9.5**				**0.5**	**26.2**	**73.3**	
⊙	**B-1**	**78.0**	**19**	**0.296**			**13.7**	**37.6**	**48.7**	

GeoStrata

GRAIN SIZE DISTRIBUTION - ASTM D422

North Salt Lake City
Eagle Pointe Landslide
North Salt Lake, UT
Project Number: 920-004

Plate

C - 12

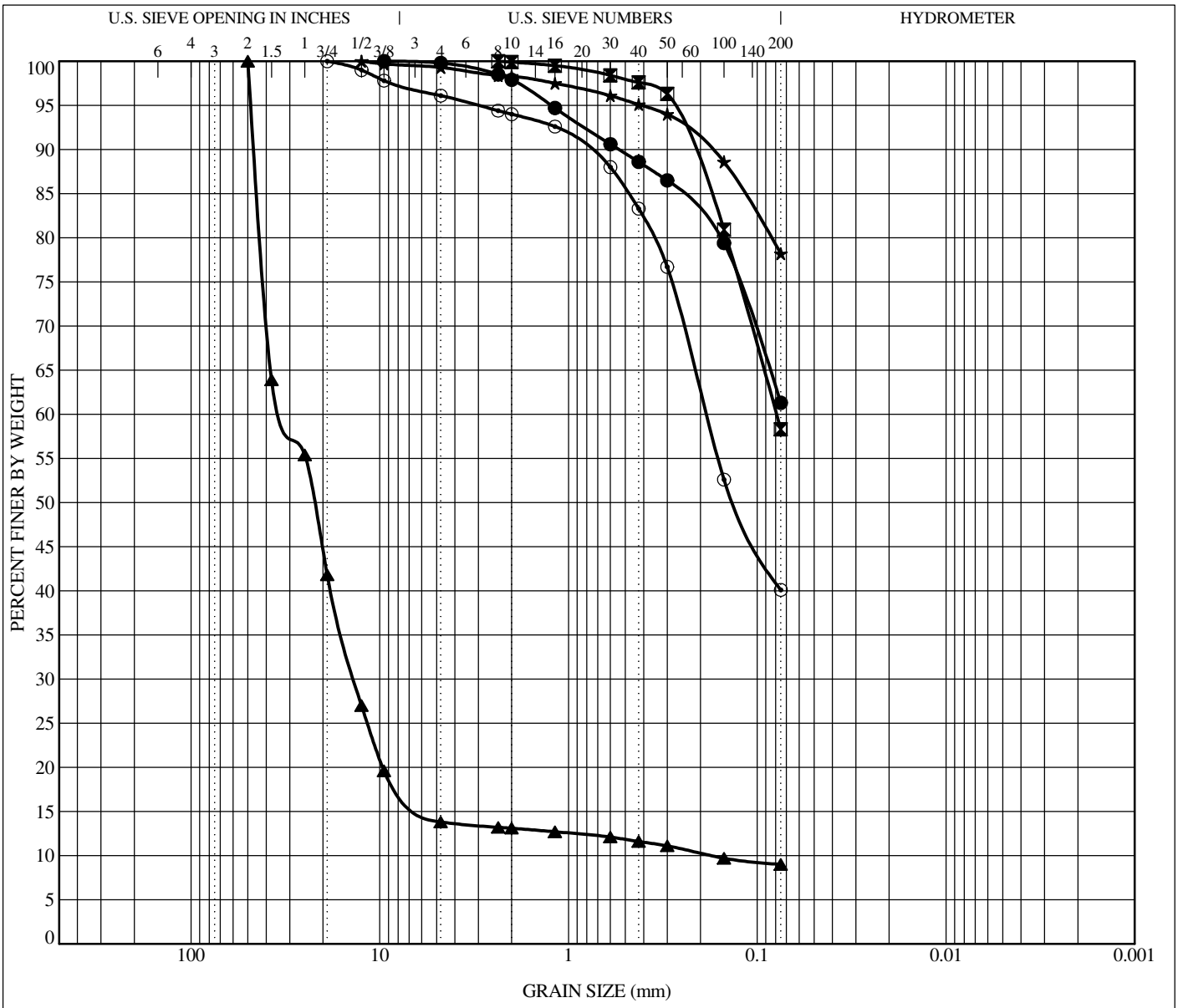

COBBLES	GRAVEL		SAND			SILT OR CLAY
	coarse	fine	coarse	medium	fine	

	Sample Location	Depth	Classification	LL	PL	PI	Cc	Cu
●	**B-1**	**82.0**	**Sandy Lean CLAY**	**35**	**15**	**20**		
⊠	**B-1**	**85.0**	**Sandy Lean CLAY**	**44**	**13**	**31**		
▲	**B-2**	**14.0**	**Poorly Graded GRAVEL with silt**	**NP**	**NP**	**NP**	**34.17**	**178.91**
★	**B-2**	**19.0**	**Lean CLAY with sand**	**42**	**13**	**29**		
⊙	**B-2**	**22.0**	**Silty Clayey SAND**	**21**	**15**	**6**		

	Sample Loctaion	Depth	D100	D60	D30	D10	%Gravel	%Sand	%Silt	%Clay
●	**B-1**	**82.0**	**9.5**				**0.2**	**38.5**	**61.3**	
⊠	**B-1**	**85.0**	**2.36**	**0.079**			**0.0**	**41.7**	**58.3**	
▲	**B-2**	**14.0**	**50**	**31.134**	**13.607**	**0.174**	**86.2**	**4.8**	**9.0**	
★	**B-2**	**19.0**	**12.5**				**0.7**	**21.1**	**78.2**	
⊙	**B-2**	**22.0**	**19**	**0.186**			**3.9**	**56.0**	**40.1**	

GeoStrata

GRAIN SIZE DISTRIBUTION - ASTM D422

North Salt Lake City
Eagle Pointe Landslide
North Salt Lake, UT
Project Number: 920-004

Plate

C - 13

C_GSD BORING LOGS.GPJ GEOSTRATA.GDT 10/21/14

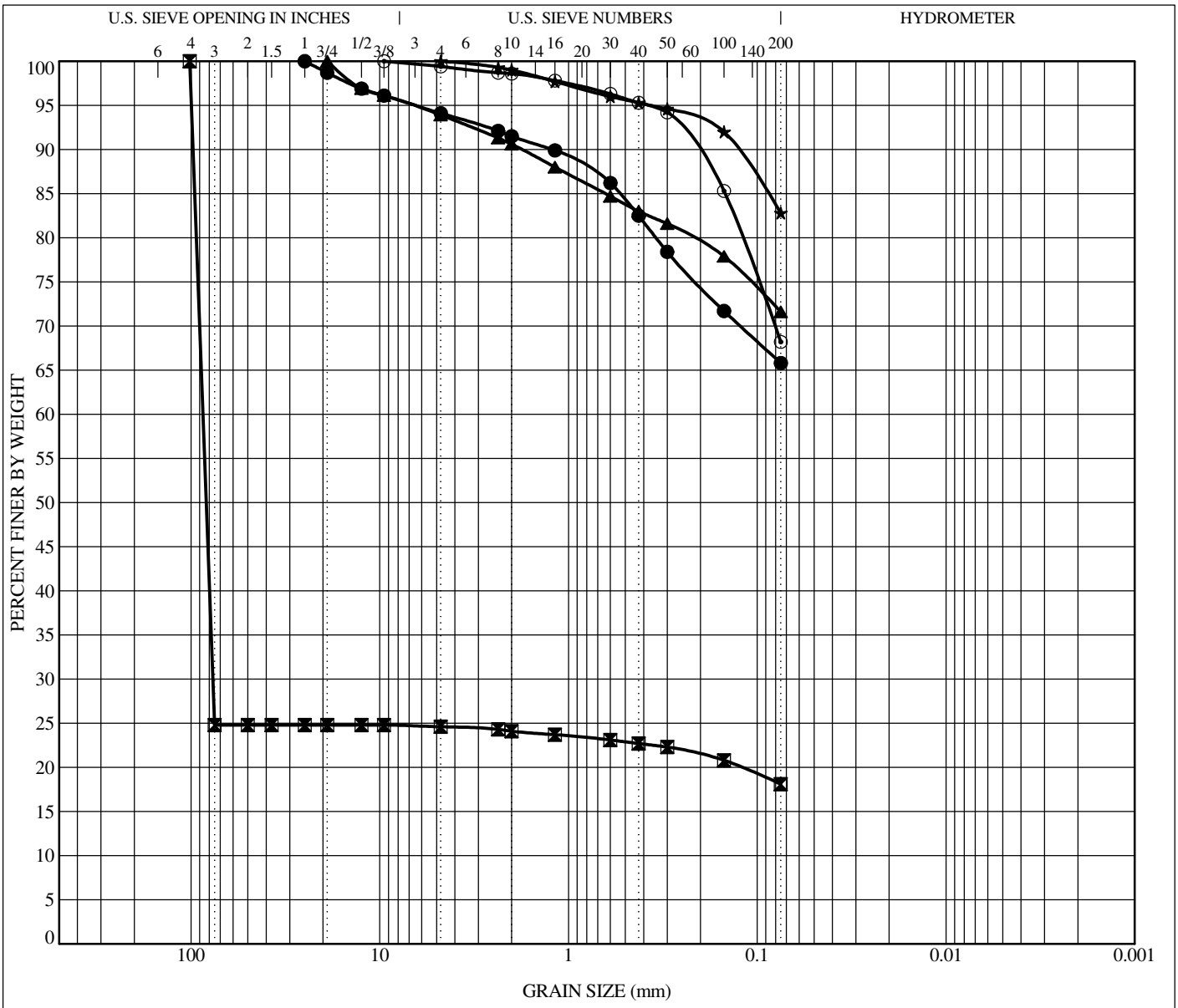

COBBLES	GRAVEL		SAND			SILT OR CLAY
	coarse	fine	coarse	medium	fine	

	Sample Location	Depth	Classification	LL	PL	PI	Cc	Cu
●	**B-2**	**24.0**	**Sandy Lean CLAY**	**38**	**16**	**22**		
⊠	**B-2**	**28.0**	**Lean CLAY with sand**	**39**	**16**	**23**		
▲	**B-2**	**31.0**	**Lean CLAY with sand**	**33**	**14**	**19**		
★	**B-2**	**34.0**	**Lean CLAY with sand**	**40**	**17**	**23**		
⊙	**B-2**	**36.0**	**Sandy Lean CLAY**	**32**	**14**	**18**		

	Sample Loctaion	Depth	D100	D60	D30	D10	%Gravel	%Sand	%Silt	%Clay
●	**B-2**	**24.0**	**25**				**5.9**	**28.3**	**65.8**	
⊠	**B-2**	**28.0**	**101.6**	**86.451**	**76.591**		**4.1**	**6.5**	**18.1**	
▲	**B-2**	**31.0**	**19**				**6.1**	**22.3**	**71.6**	
★	**B-2**	**34.0**	**4.75**				**0.0**	**17.2**	**82.8**	
⊙	**B-2**	**36.0**	**9.5**				**0.6**	**31.2**	**68.2**	

GeoStrata

GRAIN SIZE DISTRIBUTION - ASTM D422

North Salt Lake City
Eagle Pointe Landslide
North Salt Lake, UT
Project Number: 920-004

Plate

C - 14

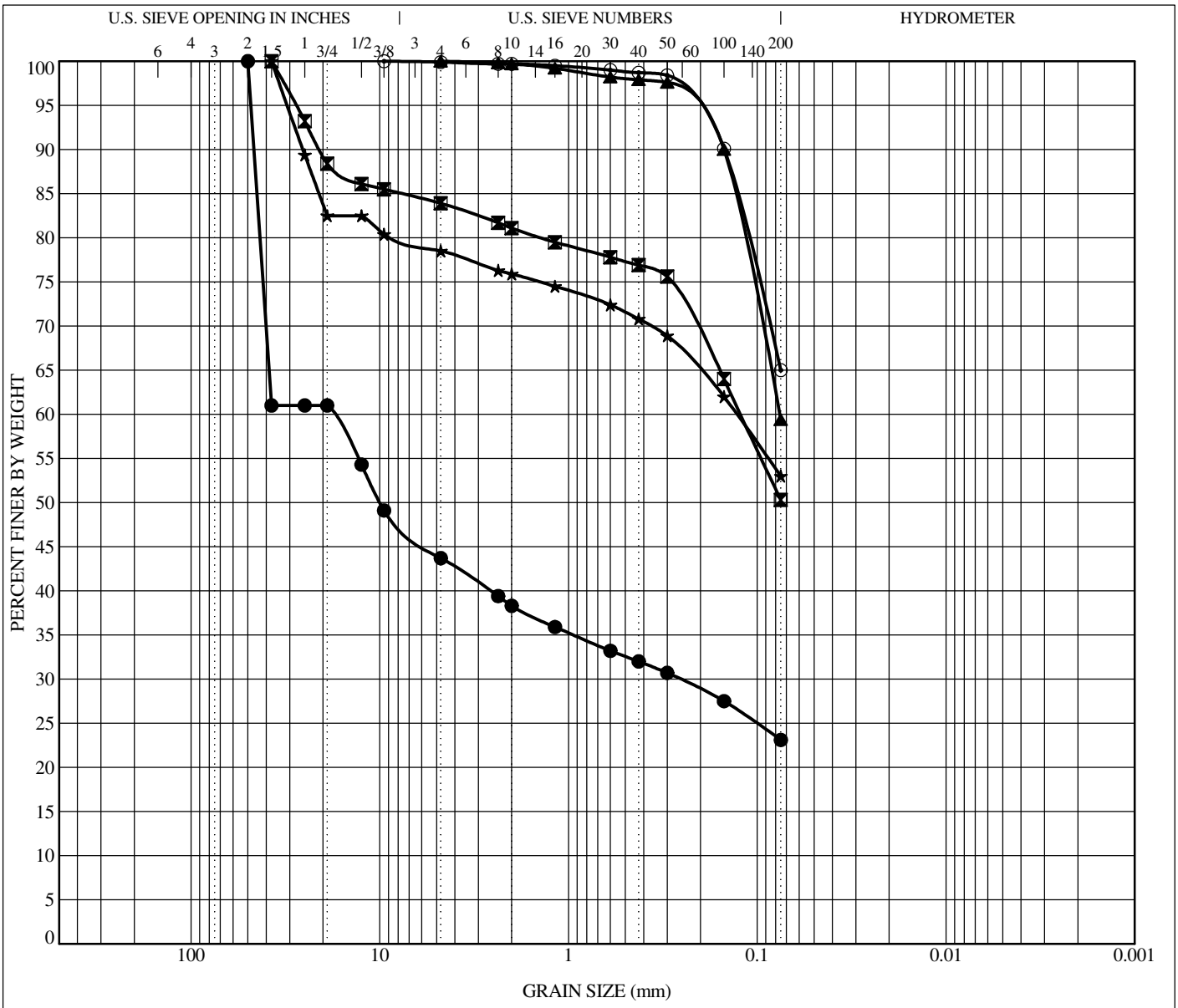

COBBLES	GRAVEL		SAND			SILT OR CLAY
	coarse	fine	coarse	medium	fine	

	Sample Location	Depth	Classification	LL	PL	PI	Cc	Cu
●	**B-2**	**38.0**	**Clayey GRAVEL with sand**	**31**	**15**	**16**		
⊠	**B-2**	**41.0**	**Sandy Silty CLAY with gravel**	**27**	**20**	**7**		
▲	**B-2**	**44.0**	**Sandy Lean CLAY**	**36**	**18**	**18**		
★	**B-2**	**46.0**	**Sandy Lean CLAY with gravel**	**44**	**13**	**31**		
⊙	**B-2**	**48.0**	**Sandy Lean CLAY**	**49**	**17**	**32**		

	Sample Loctaion	Depth	D100	D60	D30	D10	%Gravel	%Sand	%Silt	%Clay
●	**B-2**	**38.0**	**50**	**17.849**	**0.258**		**56.3**	**20.6**	**23.1**	
⊠	**B-2**	**41.0**	**37.5**	**0.123**			**16.1**	**33.6**	**50.3**	
▲	**B-2**	**44.0**	**4.75**	**0.076**			**0.0**	**40.6**	**59.4**	
★	**B-2**	**46.0**	**37.5**	**0.129**			**21.5**	**25.5**	**53.0**	
⊙	**B-2**	**48.0**	**9.5**				**0.1**	**34.9**	**65.0**	

GeoStrata

GRAIN SIZE DISTRIBUTION - ASTM D422

North Salt Lake City
Eagle Pointe Landslide
North Salt Lake, UT
Project Number: 920-004

Plate

C - 15

C_GSD BORING LOGS.GPJ GEOSTRATA.GDT 10/21/14

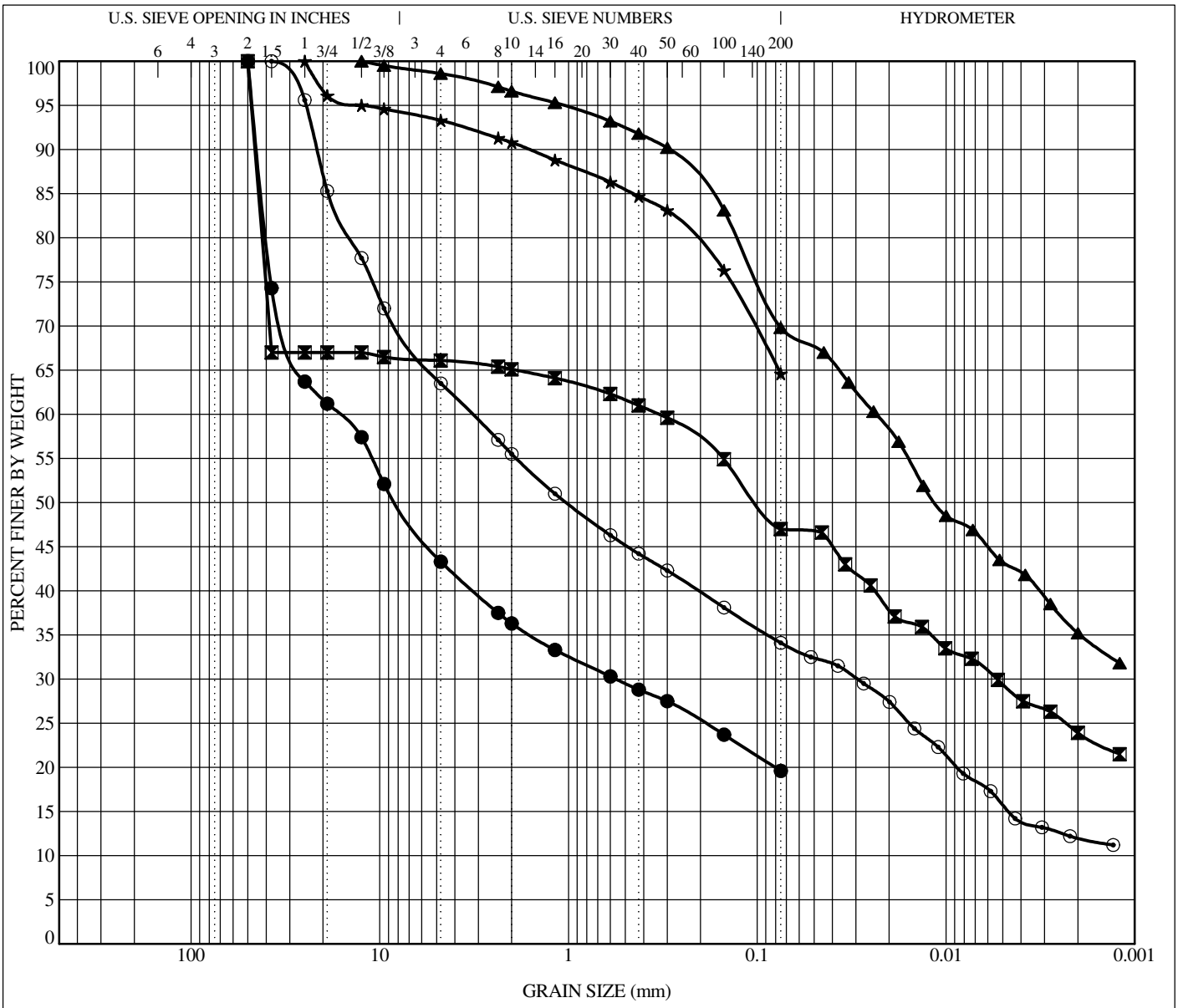

COBBLES	GRAVEL		SAND			SILT OR CLAY
	coarse	fine	coarse	medium	fine	

	Sample Location	Depth	Classification	LL	PL	PI	Cc	Cu
●	**B-2**	**50.0**	**Clayey GRAVEL with sand**	**31**	**15**	**16**		
⊠	**B-2**	**53.0**	**Clayey GRAVEL with sand**	**42**	**15**	**27**		
▲	**B-2**	**56.0**	**Sandy Lean CLAY**	**38**	**14**	**24**		
★	**B-2**	**59.0**	**Sandy Lean CLAY**	**40**	**19**	**21**		
⊙	**B-2**	**61.0**	**Clayey GRAVEL with sand**	**33**	**16**	**17**		

	Sample Loctaion	Depth	D100	D60	D30	D10	%Gravel	%Sand	%Silt	%Clay
●	**B-2**	**50.0**	**50**	**16.647**	**0.56**		**56.7**	**23.7**	**19.6**	
⊠	**B-2**	**53.0**	**50**	**0.331**	**0.005**		**33.9**	**19.1**	**23.1**	**23.9**
▲	**B-2**	**56.0**	**12.5**	**0.024**			**1.4**	**28.8**	**34.6**	**35.2**
★	**B-2**	**59.0**	**25**				**6.7**	**28.7**	**64.6**	
⊙	**B-2**	**61.0**	**37.5**	**3.24**	**0.03**		**36.5**	**29.4**	**22.1**	**12.0**

GeoStrata

GRAIN SIZE DISTRIBUTION - ASTM D422

North Salt Lake City
Eagle Pointe Landslide
North Salt Lake, UT
Project Number: 920-004

Plate

C - 16

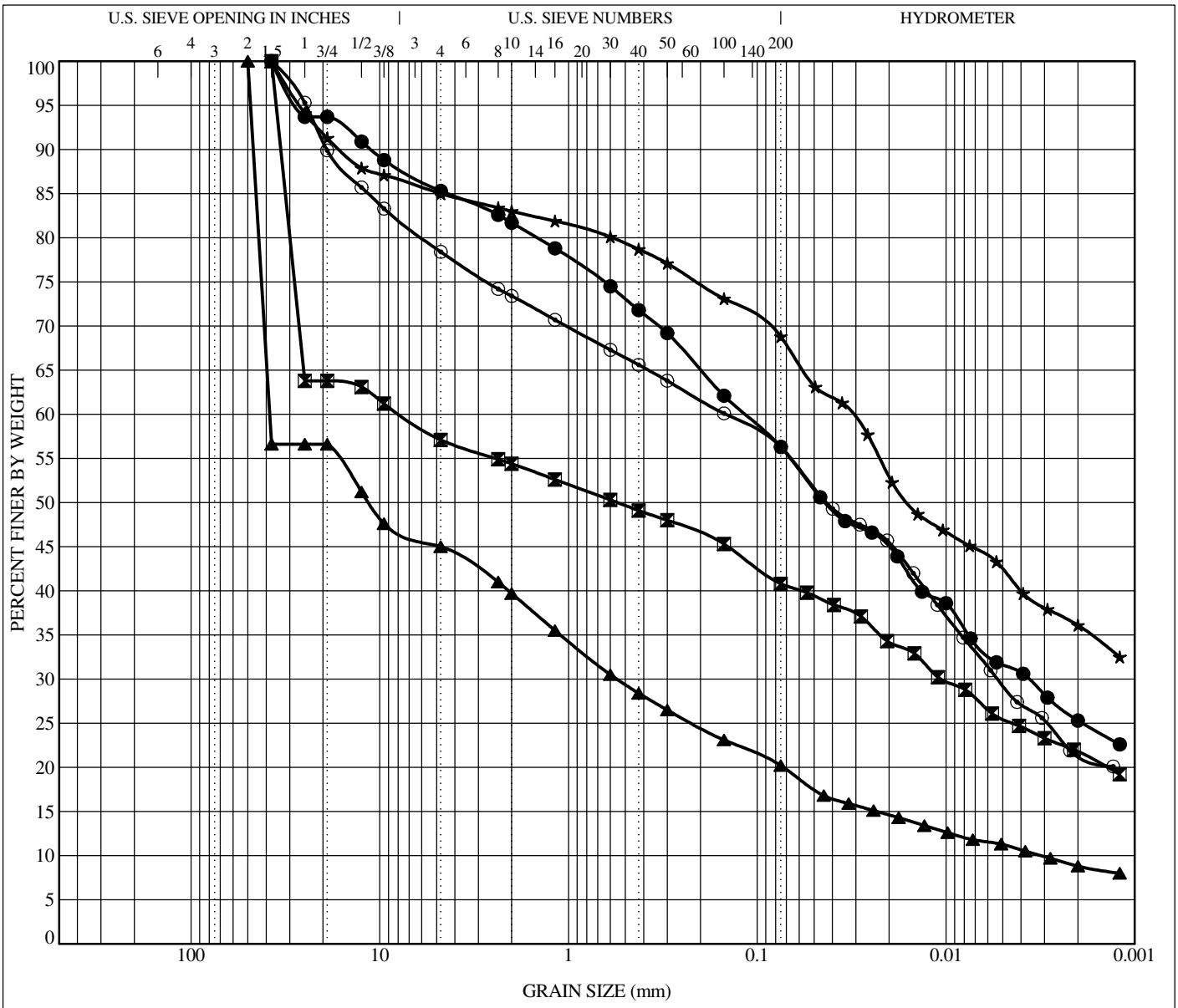

COBBLES	GRAVEL		SAND			SILT OR CLAY
	coarse	fine	coarse	medium	fine	

	Sample Location	Depth	Classification	LL	PL	PI	Cc	Cu
●	**B-2**	**64.0**	**Sandy Fat CLAY**	**50**	**18**	**32**		
⊠	**B-2**	**66.0**	**Clayey GRAVEL with sand**	**49**	**17**	**32**		
▲	**B-2**	**68.0**	**Clayey GRAVEL with sand**	**31**	**15**	**16**	**2.541**	**2215.93**
★	**B-2**	**71.0**	**Sandy Lean CLAY with gravel**	**48**	**17**	**31**		
⊙	**B-2**	**74.0**	**Sandy Lean CLAY with gravel**	**40**	**15**	**25**		

	Sample Loctaion	Depth	D100	D60	D30	D10	%Gravel	%Sand	%Silt	%Clay
●	**B-2**	**64.0**	**37.5**	**0.117**	**0.004**		**14.7**	**29.0**	**31.0**	**25.3**
⊠	**B-2**	**66.0**	**37.5**	**7.756**	**0.01**		**42.9**	**16.3**	**19.0**	**21.8**
▲	**B-2**	**68.0**	**50**	**38.355**	**0.553**	**0.003**	**55.0**	**24.8**	**11.4**	**8.8**
★	**B-2**	**71.0**	**37.5**	**0.032**			**15.0**	**16.2**	**32.7**	**36.1**
⊙	**B-2**	**74.0**	**37.5**	**0.147**	**0.005**		**21.6**	**22.1**	**34.7**	**21.6**

GeoStrata

GRAIN SIZE DISTRIBUTION - ASTM D422

North Salt Lake City
Eagle Pointe Landslide
North Salt Lake, UT
Project Number: 920-004

Plate

C - 17

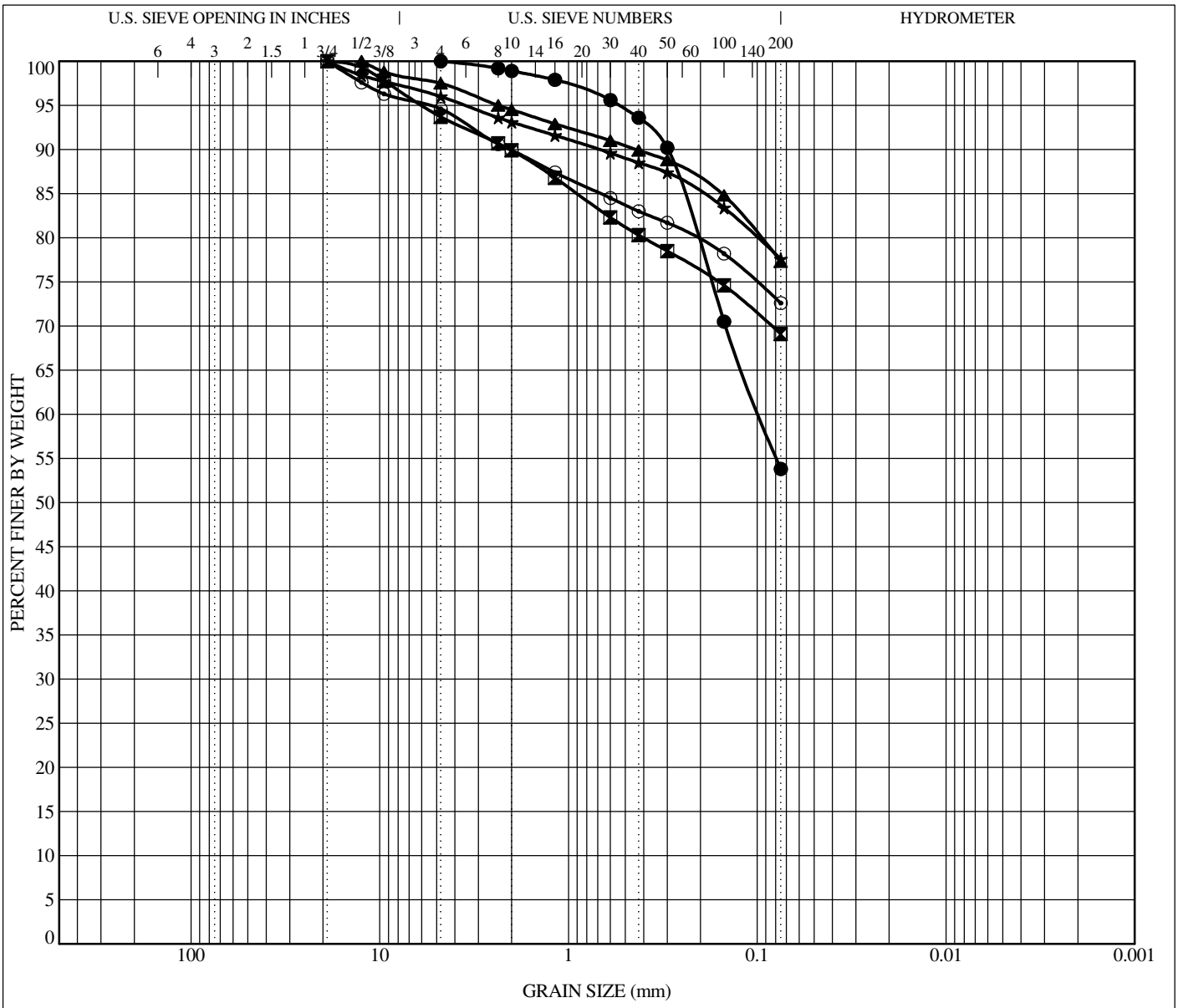

COBBLES	GRAVEL		SAND			SILT OR CLAY
	coarse	fine	coarse	medium	fine	

	Sample Location	Depth	Classification	LL	PL	PI	Cc	Cu
●	**B-2**	**76.0**	**Sandy Lean CLAY**	**33**	**16**	**17**		
⊠	**B-2**	**79.0**	**Sandy Lean CLAY**	**45**	**13**	**32**		
▲	**B-2**	**80.0**	**Fat CLAY with sand**	**60**	**25**	**35**		
★	**B-2**	**83.0**	**Fat CLAY with sand**	**54**	**18**	**36**		
⊙	**B-2**	**85.0**	**Fat CLAY with sand**	**61**	**24**	**37**		

	Sample Loctaion	Depth	D100	D60	D30	D10	%Gravel	%Sand	%Silt	%Clay
●	**B-2**	**76.0**	**4.75**	**0.097**			**0.0**	**46.2**	**53.8**	
⊠	**B-2**	**79.0**	**19**				**6.3**	**24.6**	**69.1**	
▲	**B-2**	**80.0**	**12.5**				**2.5**	**20.2**	**77.3**	
★	**B-2**	**83.0**	**19**				**4.0**	**18.4**	**77.6**	
⊙	**B-2**	**85.0**	**19**				**5.4**	**22.0**	**72.6**	

GeoStrata

GRAIN SIZE DISTRIBUTION - ASTM D422

North Salt Lake City
Eagle Pointe Landslide
North Salt Lake, UT
Project Number: 920-004

Plate

C - 18

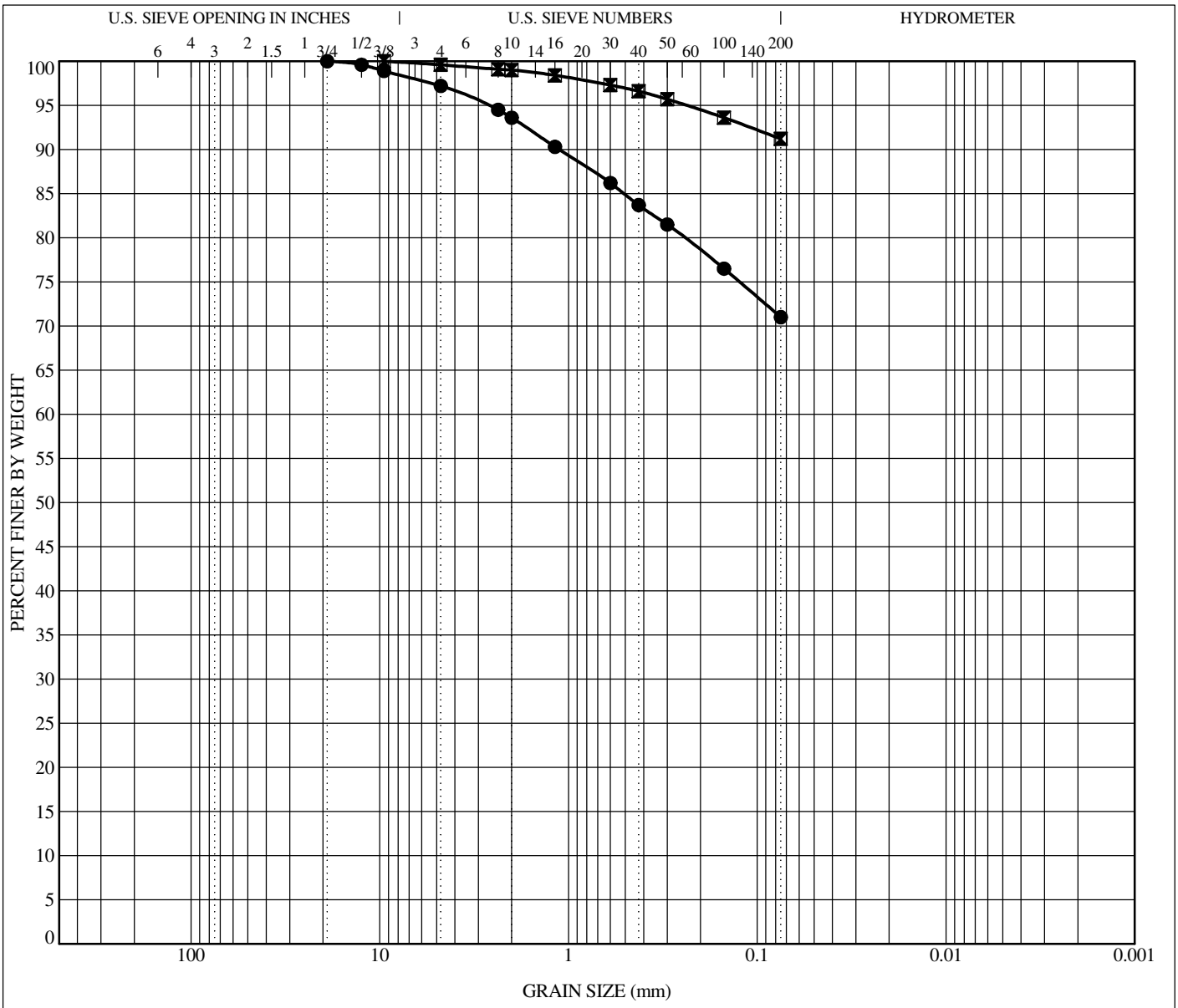

COBBLES	GRAVEL		SAND			SILT OR CLAY
	coarse	fine	coarse	medium	fine	

	Sample Location	Depth	Classification	LL	PL	PI	Cc	Cu
●	**B-2**	**87.0**	**Fat CLAY with sand**	**57**	**24**	**33**		
⊠	**B-2**	**88.0**	**Fat CLAY**	**81**	**24**	**57**		

	Sample Loctaion	Depth	D100	D60	D30	D10	%Gravel	%Sand	%Silt	%Clay
●	**B-2**	**87.0**	**19**				**2.8**	**26.2**	**71.0**	
⊠	**B-2**	**88.0**	**9.5**				**0.4**	**8.4**	**91.2**	

GeoStrata

GRAIN SIZE DISTRIBUTION - ASTM D422

North Salt Lake City
Eagle Pointe Landslide
North Salt Lake, UT
Project Number: 920-004

Plate

C - 19

DIRECT SHEAR TEST

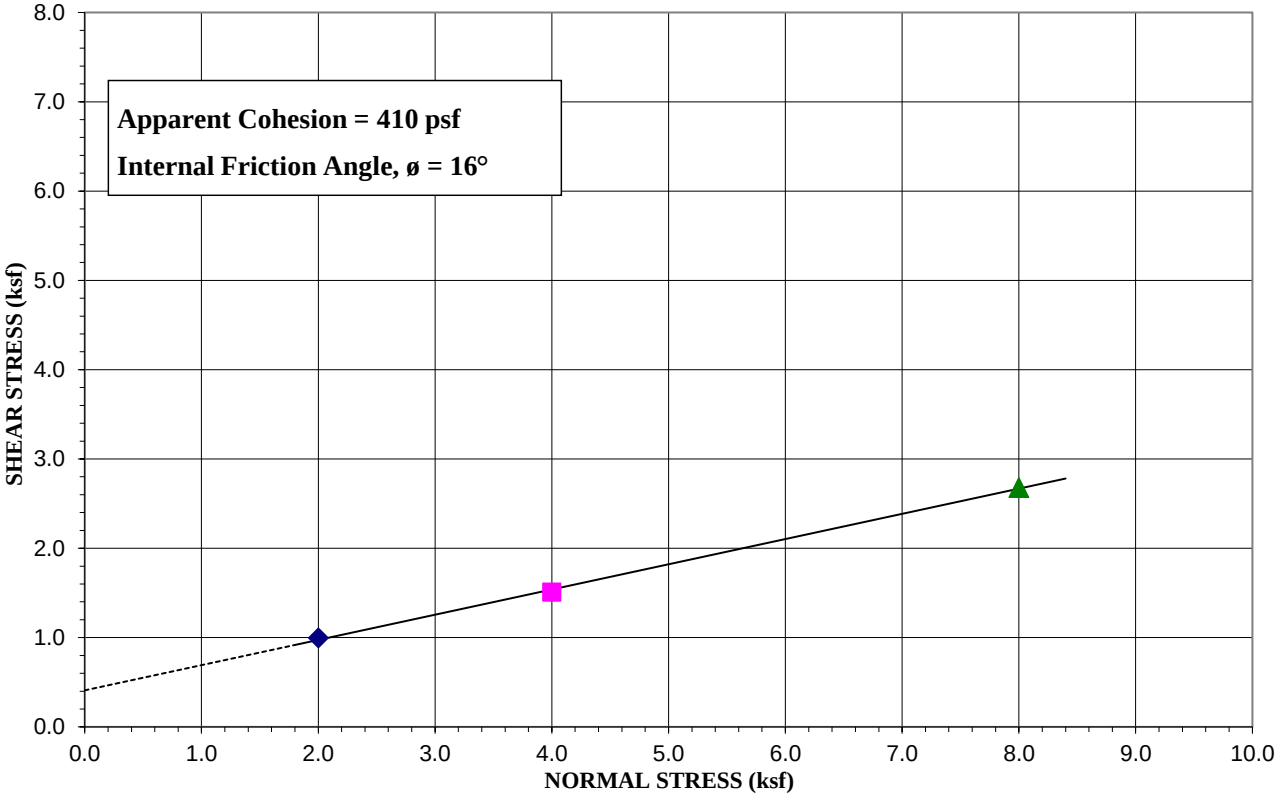

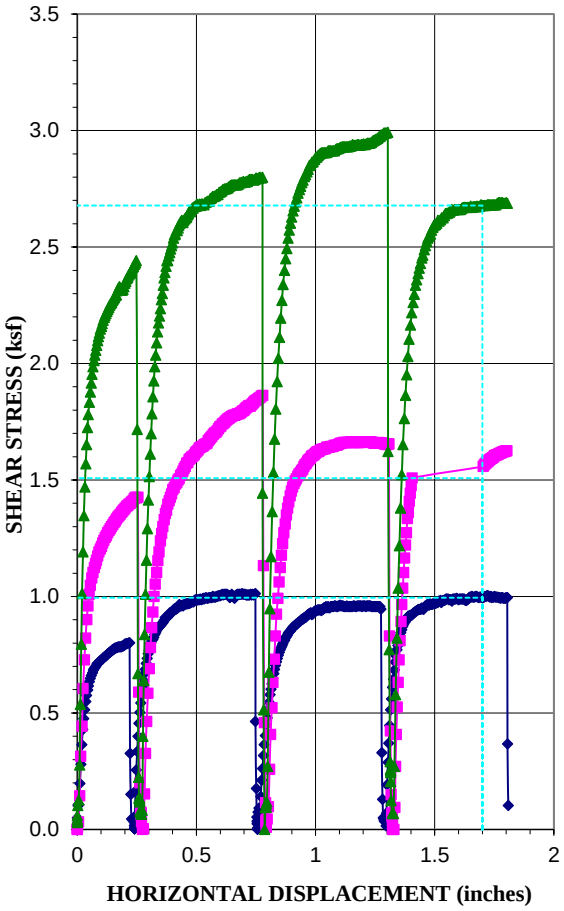

Source:	B-1 @ 63 ft
Type of Test:	Consolidated Drained/Saturated

Test No. (Symbol)	**1 (◆)**	**2 (■)**	**3 (▲)**
Sample Type	Remolded		
Initial Height, in.	1.25	1.25	1.25
Diameter, in.	2.5	2.5	2.5
Dry Density Before, pcf	89.3	88.0	87.6
Dry Density After, pcf	90.8	89.6	89.3
Moisture % Before	27.5	29.5	30.2
Moisture % After	26.6	27.7	23.0
Saturation, % Before	85.5	88.8	90.0
Saturation, % After	85.7	86.7	71.5
Normal Load, ksf	2.0	4.0	8.0
Shear Stress, ksf	0.99	1.51	2.68
Strain Rate	0.0020 IN/MIN		

Sample Properties	
Cohesion, psf	410
Friction Angle, ϕ	16
Liquid Limit, %	53
Plasticity Index, %	31
Percent Gravel	0.1
Percent Sand	27.1
Percent Passing No. 200 sieve	72.8
Classification	CH

PROJECT: NSL Landslide

PROJECT NO.: **920-004**

GeoStrata

Copyright GeoStrata , 2014

Plate C-20

DIRECT SHEAR TEST

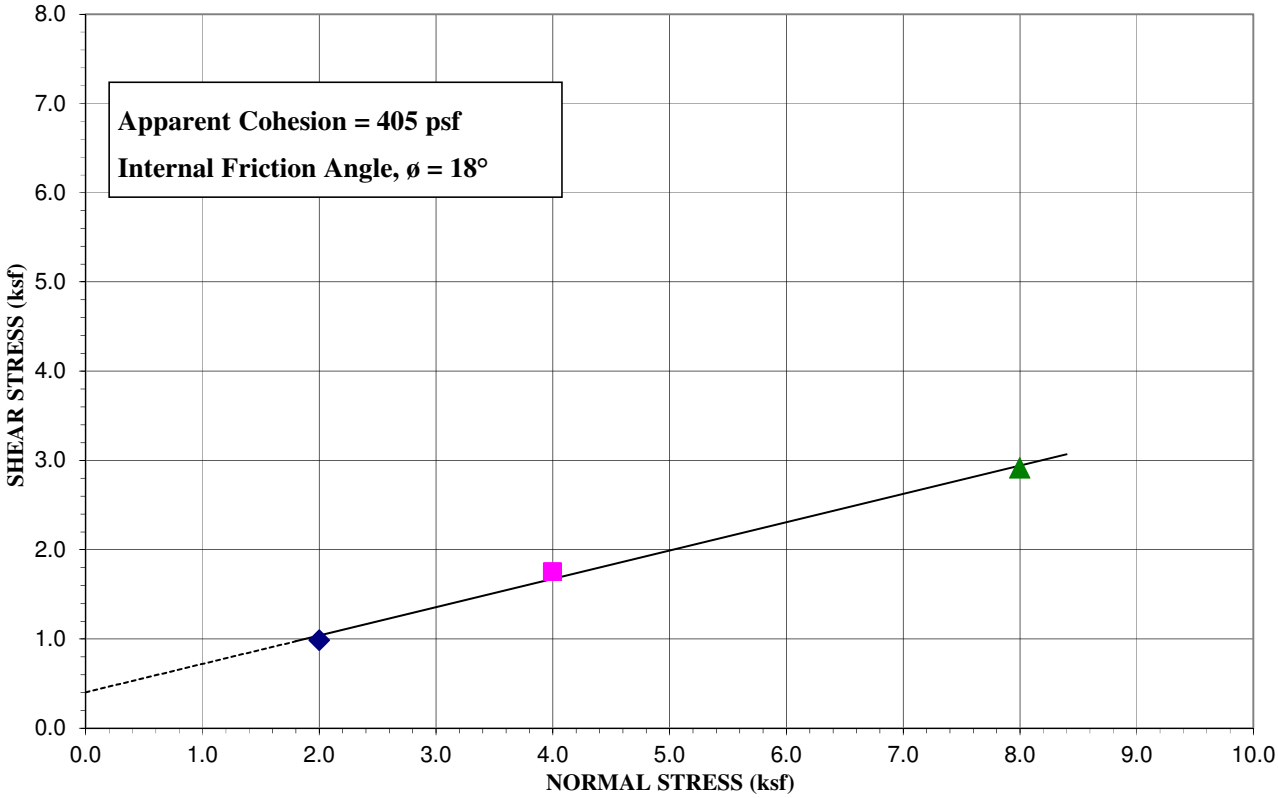

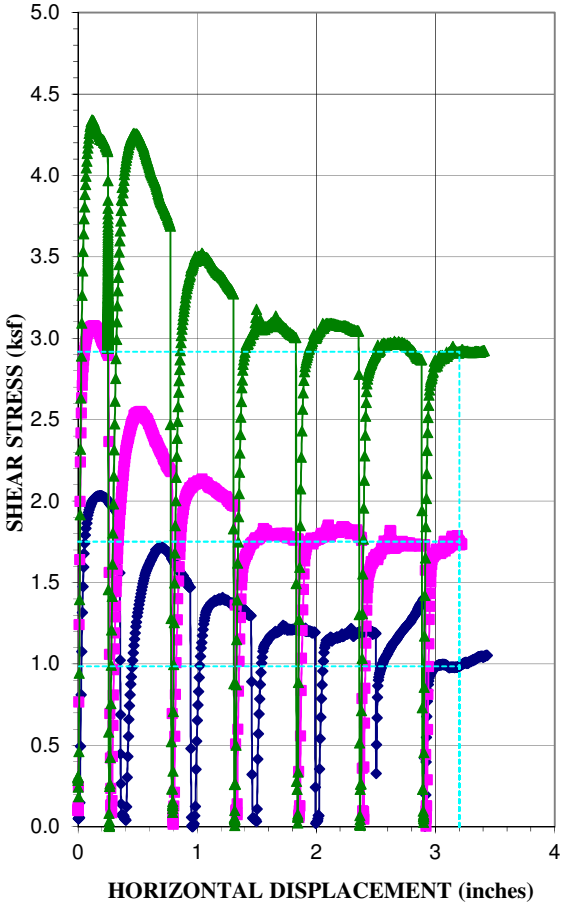

Source:	B-2 @ 71 ft
Type of Test:	Consolidated Drained/Saturated

Test No. (Symbol)	**1 (◆)**	**2 (■)**	**3 (▲)**
Sample Type	Remolded		
Initial Height, in.	1.25	1.25	1.25
Diameter, in.	2.5	2.5	2.5
Dry Density Before, pcf	95.7	96.7	94.6
Dry Density After, pcf	97.2	98.3	96.1
Moisture % Before	17.1	21.0	19.3
Moisture % After	20.2	20.3	20.0
Saturation, % Before	62.3	78.4	68.3
Saturation, % After	76.2	79.0	73.5
Normal Load, ksf	2.0	4.0	8.0
Shear Stress, ksf	0.99	1.75	2.92
Strain Rate	0.0020 IN/MIN		

Sample Properties	
Cohesion, psf	405
Friction Angle, ϕ	18
Liquid Limit, %	48
Plasticity Index, %	31
Percent Gravel	15.0
Percent Sand	16.2
Percent Passing No. 200 sieve	68.8
Classification	CL

PROJECT: NSL Landslide

PROJECT NO.: 920-004

GeoStrata

Copyright GeoStrata , 2014

Plate C-21

(ALTERNATE) BID SCHEDULE "D"
EAGLEPOINTE UTILITY IMPROVEMENTS

NOTE: No separate traffic control bid item is included; any costs associated with traffic control shall be included in unit prices.

		UNIT	CONTRACT QUANTITY	CONTRACT UNIT PRICE	CONTRACT TOTAL
General					
1	Mobilization/demobilization	LUMP	1		$ -
2	SWPPP for Utility Work, to include construction entrances, berming, straw waddles, silt fencing, inlet box protection, ditching and other BMPs as may be required.	LUMP	1		$ -
Roadway					
3	Remove and dispose of existing asphalt	SF	8,456		$ -
4	Remove and dispose of existing curb and gutter	LF	526		$ -
5	Remove and dispose of existing sidewalk	LF	617		$ -
6	Sidewalk ramps, including saw cutting ramps into existing curb and gutter as required, forming of ramps, compacted base under concrete, all concrete, curing compound, protection and detector pads	EACH	4		$ -
7	Asphalt 3" thickness - Place in one lift, including tack coat on all concrete edges, pay reductions as applicable from UDOT Standard Specifications shall apply.	SF	9,947		$ -
8	Base 8" thick, meeting UDOT specified gradation, compacted to 95% of T-180 proctor density, pay reductions as applicable from UDOT Standard Specifications shall apply.	SF	9,947		$ -
9	30" Highback Curb and Gutter - includes subgrade preparation and 6" compacted base, curing agent and protection, driveway and ramp cuts.	LF	676		$ -
10	4' Sidewalk - includes subgrade preparation and 6" compacted base, reinforcing steel, curing agent and protection from traffic during the curing period (7 days minimum).	LF	311		$ -
Sewer					
11	Remove and cap existing sewer lateral at main, includes exposing lateral at main, furnishing and installing a cap or plug per SDSD requirements, and backfill and compaction of excavated material.	EACH	6		$ -
12	Sewer Manhole Adjustment - removing sections as required to bring rim elevation within 2 feet of revised grade. Removed sections are to be salvaged and used elsewhere.	EACH	1		$ -
13	Raising existing manholes to propert grade and placement of the concrete ring around the manhole after paving operations. Price includes all testing and protection during construction.	EACH	2		$ -
14	4" Service Lateral adjustment including locating existing lateral, installing new bend and cleanout, installing approximately 30 LF of new 4" piping beyond the new PUE, excavation, pipe bedding, grade control, backfill, compaction, marker post, etc.	EACH	1		$ -

(ALTERNATE) BID SCHEDULE "D"
EAGLEPOINTE UTILITY IMPROVEMENTS

NOTE: No separate traffic control bid item is included; any costs associated with traffic control shall be included in unit prices.

		UNIT	CONTRACT QUANTITY	CONTRACT UNIT PRICE	CONTRACT TOTAL
15	4" Service Laterals extension, including all excavation, locating end of the existing lateral, furnishing and installing approximately 20 LF of new 4" lateral, pipe bedding, grade control, piping, backfill, compaction, marker post, etc.	EACH	2		$ -
Water					
16	Shut off existing laterals at main, includes exposing the main and corp stop, removing corp stop and installing a Romac CL1 full circle repair clamp or equivalent around the main line, removing the lateral, and backfill and compaction of all excavated material.	EACH	3		$ -
17	Removal of existing water main, backfill and compaction of all excavated material.	LF	273		$ -
18	Removal of existing water laterals that were connected to existing water main that is to be removed. Includes backfill and compaction of all excavated material.	EACH	3		$ -
19	10" HDPE Main, includes all excavation and disposal of unsuitable soil material, fusion and installation of pipe, pipe bedding, select backfill, compaction, copper tracer wire, disinfection, pressure testing, bacteria testing and acceptance by City. Pipe shall be installed to provide a minimum of 42" cover over the top of the pipe from final grades.	LF	348		$ -
20	8" Gate Valves with valve boxes, accessories, connection to tracer wire. Includes necessary valve key extensions when 2" operating nut is below 5' from ground surface.	EACH	1		$ -
21	8" 22.5-degree bend with all accessories	EACH	1		$ -
22	10" 22.5-degree HDPE bend - optional	EACH	1		$ -
23	10" 45-degree HDPE bend	EACH	1		$ -
24	10" 45-degree DI Flanged bend	EACH	1		$ -
25	Furnish and install 10" HDPE Flange Adapter with metal backing ring. To be installed at connections to existing pipe or fittings to transition between PVC or flanged fittings to HDPE pipe.	EACH	2		$ -
26	Connect to existing piping - to include locating ends of existing HDPE and PVC piping.	EACH	2		$ -
27	Remove and salvage existing fire hydrant assembly	EACH	1		$ -
28	Install Complete Hydrant Assembly using salvaged hydrant, to include all excavation, exposing existing main at the end of the existing HDPE line, installing new 1/4 bend, reducer, valve and piping as required, gravel sumps, plastic wrap, backfill, rotating pumper nozzle to proper alignment for a complete hydrant installation.	EACH	1		$ -

(ALTERNATE) BID SCHEDULE "D"
EAGLEPOINTE UTILITY IMPROVEMENTS

NOTE: No separate traffic control bid item is included; any costs associated with traffic control shall be included in unit prices.

		UNIT	CONTRACT QUANTITY	CONTRACT UNIT PRICE	CONTRACT TOTAL
29	Install 3/4" Water Lateral on 10" HDPE water main, utilizing salvaged metersetter and meter box. Includes Romac 202N-H-8.68 x 3/4" IP saddle (or approved saddle compatible with HDPE pipe), new corp stop and copper lateral into lot, marker post - per North Salt Lake Standards. Includes tracer wire on all laterals.	EACH	3		$ -
Secondary Water					
30	Remove and cap existing dual laterals on existing main. Includes exposing the saddle at the main line, removal of the existing lateral from the saddle and installing a brass plug in the saddle per NSL requirements.	EACH	1		$ -
31	Removal of existing secondary water main, backfill and compaction of all excavated material.	LF	324		$ -
32	Removal of existing water laterals that were connected to existing secondary water main that is to be removed. Includes backfill and compaction of all excavated material.	EACH	3		$ -
33	10" HDPE Main, includes all excavation and disposal of unsuitable soil material, fusion and installation of pipe, pipe bedding, select backfill, compaction, copper tracer wire, disinfection, pressure testing, bacteria testing and acceptance by City. Pipe shall be installed to provide a minimum of 30" cover over the top of the pipe from final grades.	LF	35		$ -
34	12" HDPE Main, includes all excavation and disposal of unsuitable soil material, fusion and installation of pipe, pipe bedding, select backfill, compaction, copper tracer wire, disinfection, pressure testing, bacteria testing and acceptance by City. Pipe shall be installed to provide a minimum of 30" cover over the top of the pipe from final grades.	LF	369		$ -
35	10" Gate Valves with valve boxes, accessories, connection to tracer wire. Includes necessary valve key extensions when 2" operating nut is below 5' from ground surface.	EACH	2		$ -
36	10" 22.5-degree bend with all accessories	EACH	1		$ -
37	10" 45-degree HDPE bend	EACH	1		$ -
38	12" 22.5-degree HDPE bend - optional	EACH	1		$ -
39	12" 45-degree HDPE bend	EACH	1		$ -
40	12" 45-degree DI Flanged bend	EACH	1		$ -
41	12"x10" HDPE Tee	EACH	1		$ -
42	Furnish and install 10" HDPE Flange Adapter with metal backing ring. To be installed at connections to existing pipe or fittings to transition between PVC or flanged fittings to HDPE pipe.	EACH	1		$ -
43	Furnish and install 12" HDPE Flange Adapter with metal backing ring. To be installed at connections to existing pipe or fittings to transition between PVC or flanged fittings to HDPE pipe.	EACH	2		$ -

(ALTERNATE) BID SCHEDULE "D"
EAGLEPOINTE UTILITY IMPROVEMENTS

NOTE: No separate traffic control bid item is included; any costs associated with traffic control shall be included in unit prices.

		UNIT	CONTRACT QUANTITY	CONTRACT UNIT PRICE	CONTRACT TOTAL
44	Connect to existing piping - to include locating ends of existing HDPE and PVC piping.	EACH	2		$ -
45	Laterals - Per lot price, two lots share lateral from main, includes Romac 202N-H service saddle, curb valves, curb box, all fittings, purple poly tubing, PVC stub a minimum of 10' into the lot with a 2 x 4 marker post, meter yoke and meter box with lid per North Salt Lake details. Includes 2" conduit between meter boxes and tracer wire on all laterals.	EACH	1		$ -
Storm Drainage					
46	Removal of existing 15" Reinforced concrete piping, including all excavation, and backfill and compaction of the excavated material.	LF	467		$ -
47	Removal of existing catch basins and manholes, including all excavation, and backfill and compaction of the excavated material.	EACH	7		$ -
48	Remove and cap existing land drain laterals, including all excavation, patching of the storm drain main, all excavation, and backfill and compaction of the excavated material.	EACH	1		$ -
49	Convert or replace existing manhole with combo box, complete with grates, select backfill, compaction, etc.	EACH	1		$ -
50	15" SDR 11 HDPE Storm Drain Pipe, includes excavation, bedding material, trench shoring and trench stabilization material as required, select backfill, compaction, furnishing all materials, fusion welding, grade control, compaction, etc. for a complete installation.	LF	432		$ -
51	Inlet Boxes, complete with grates, excavation, select backfill, compaction, etc.	EACH	2		$ -
52	Combination Boxes, complete with grates, excavation, select backfill, compaction, etc. (Does not include box at existing manhole. See previous item).	EACH	1		$ -
53	Cleanout Manholes, complete with ring and cover, excavation, select backfill, compaction, raising to grade and installing concrete ring as required by NSL City.	EACH	4		$ -
54	Connect to existing manhole, or catch basin, including all excavation, cutting or preparation as required for the connection, grouting on the inside and outside as required for a water-tight connection, select backfill and compaction as required for a complete connection. There may be more than one connection per structure.	EACH	5		$ -
55	Install 4" PVC Land Drain Lateral to 15' into property, including all excavation, pipe bedding, pipe, fittings, connection to box , backfill, compaction, marker post, etc., for a complete lateral assembly.	EACH	3		$ -
Private Utilities - Quantities are estimates and subject to revision					
56	Terminate existing Rocky Mountain Power (RMP) lines.	EACH	2		$ -
57	Terminate existing CenturyLink lines.	EACH	2		$ -

(ALTERNATE) BID SCHEDULE "D"
EAGLEPOINTE UTILITY IMPROVEMENTS

NOTE: No separate traffic control bid item is included; any costs associated with traffic control shall be included in unit prices.

		UNIT	CONTRACT QUANTITY	CONTRACT UNIT PRICE	CONTRACT TOTAL
58	Provide trenching for Rocky Mountain Power (RMP) lines. Location to be determined from RMP design layout. Trenching to be per RMP requirements.	LF	457		$ -
59	Furnish and install 4"Grey Schedule 40 PVC conduit in RMP trench per RMP layout. Includes all piping, glue, joints, and installation of pull string per RMP specifications. Also included is the sand bedding of the conduits per RMP requirements. Upon all conduit installation (may include CenturyLink and Cable), backfilling and compaction of the trench.	LF	457		$ -
60	Furnish and install 4" PVC conduit under roadways per utility plan provided by the utility companies. Piping to meet private utility requirements. Quantity may vary. Multiple conduits may share the same trench. Unit price to include all excavation, sand bedding, trench backfill, moisture conditioning and compaction. Marker posts are to be installed at the ends of all conduits. Ends shall be plugged to prevent material from entering the conduits.	LF	200		$ -
61	Furnish and install 4" fiberglass long-sweep elbows as required per RMP layout. Bends may be installed horizontal or vertical. Includes installing pull string through the bends, and capping vertical bends to prevent material from entering the conduits.	EACH	2		$ -
62	Furnish and install 4" PVC long-sweep elbows as required per RMP layout. Bends may be installed horizontal or vertical. Includes installing pull string through the bends, and capping vertical bends to prevent material from entering the conduits.	EACH	2		$ -

TOTAL $ -